Ezee-On

MODEL 3600/3650
DOUBLE OFFSET TANDEM DISC

OWNER'S MANUAL
and
PARTS LIST

8-01-96-550

Manufactured by

Ezee-On Mfg. Ltd.

Vegreville, Alberta
Canada

SAFETY RECOMMENDATIONS

1. Support main frame and wing frame securely before assembling components. Heavy frames could cause serious injury if they fall.

2. When assembling disc use aligning punch to line up holes. Keep fingers out of holes.

3. Use adequate manpower or a hoist to lift heavy components in place. Attempting to lift heavy components by yourself could cause serious injury.

4. When attaching gang assemblies, wear protective gloves to prevent injury from cutting edges of blades.

5. Do not disassemble or loosen hydraulic components when there is pressure within those components. Hydraulic components disconnected under pressure may cause parts and hydraulic fluid to fly out at a high velocity, which could cause serious injury.

6. Hydraulic oil escaping under pressure has sufficient force to cause serious injury. Relieve pressure in all hydraulic components before disconnecting any hydraulic components. Before applying pressure to hydraulic system, be sure all connections are tight and components are not damaged.

7. Check hydraulic hoses periodically for signs of rupture and leaks. Use a piece of wood or cardboard as a back stop for escaping high pressure or hot fluid. Oil escaping under pressure has sufficient force to penetrate skin.

8. Always place tractor controls in neutral and lock brakes when hitching disc to tractor. Tractor could roll backwards when hitching disc.

9. Do not stand under wing while wing is being raised or lowered. If any components of hydraulic system should fail, or if hydraulic lever should accidently be operated, wing could fall.

10. When transporting disc, always lock rockshaft by engaging lock-up strap. If any component of hydraulic system should fail, or if hydraulic lever should accidently be operated, disc could drop.

11. Do not lubricate disc while it is in motion. You may fall in front of disc and be injured.

12. Lower disc completely to ground when servicing. If disc must be serviced in raised position lock rockshaft by engaging lock-up strap. If any component of hydraulic system should fail, or if hydraulic lever should accidently be operated, disc could drop.

13. When trailing the disc over public roads, use the SMV emblem and warning light for protection of tractor and other motor vehicle operators. Check local laws for width and height maximums.

14. Do not exceed 10 M.P.H. (16km/h) when transporting disc on smooth surfaces. Reduce speed when transporting on rough surfaces. Excessive speed could cause loss of tractor control and damage to disc and tractor. Do not transport disc with any other vehicle except tractor.

15. When operating on hillsides use extra care. Tractor may tip sideways if it strikes hole, ditch or other irregularity.

SAFETY RECOMMENDATIONS CONTINUED

16. Never allow anyone to ride on tractor drawbar, or on the disc. The person riding may fall and be seriously injured.

17. To fill wing lift cylinder with hydraulic oil, extend and contract cylinder within slot on wing until cylinders are completely filled with oil. Do not fold wings until cylinders are completely filled, wings will free fall if cylinders are not filled with oil, causing serious damage.

18. When transporting disc with wing(s) raised be sure there is sufficient clearance under all power lines and other overhead obstructions.

19. For models equipped with folding gang beams on wings - when folding or unfolding gang beams, watch your hands, and hands of person that may be standing by. The heavy gang could cause serious injury.

20. For models equipped wing folding gang beams - when transporting disc, be sure beams are folded to obtain minimum transport height.

21. For models equipped with folding gang beams on wings DO NOT raise wings into transport position with folding gangs in working position (not folded). Folding gang beam will fall rapidly, if locking pin is not installed, or if locking pin fell out, causing serious injury to persons near by, and also serious damage to disc. (Folding beams must be folded and locked into support brackets when wings are raised into transport position).

INTRODUCTION

This manual is made available for you as a handy reference and contains instructions for setting up and operating.

READ THIS BOOK CAREFULLY TO INSURE THAT YOUR NEW DISC IS ASSEMBLED AND ADJUSTED PROPERLY.

Right and left is determined by standing behind the machine and facing forward, in the direction of travel.

⚠ THIS SYMBOL IS USED TO IDENTIFY IMPORTANT SAFETY MESSAGES. WHEN YOU SEE THIS SYMBOL, READ THE SAFETY MESSAGE CAREFULLY.

Before assembling and operating disc, review all safety recommendations outlined on backside of front cover page and top of this page.

INDEX

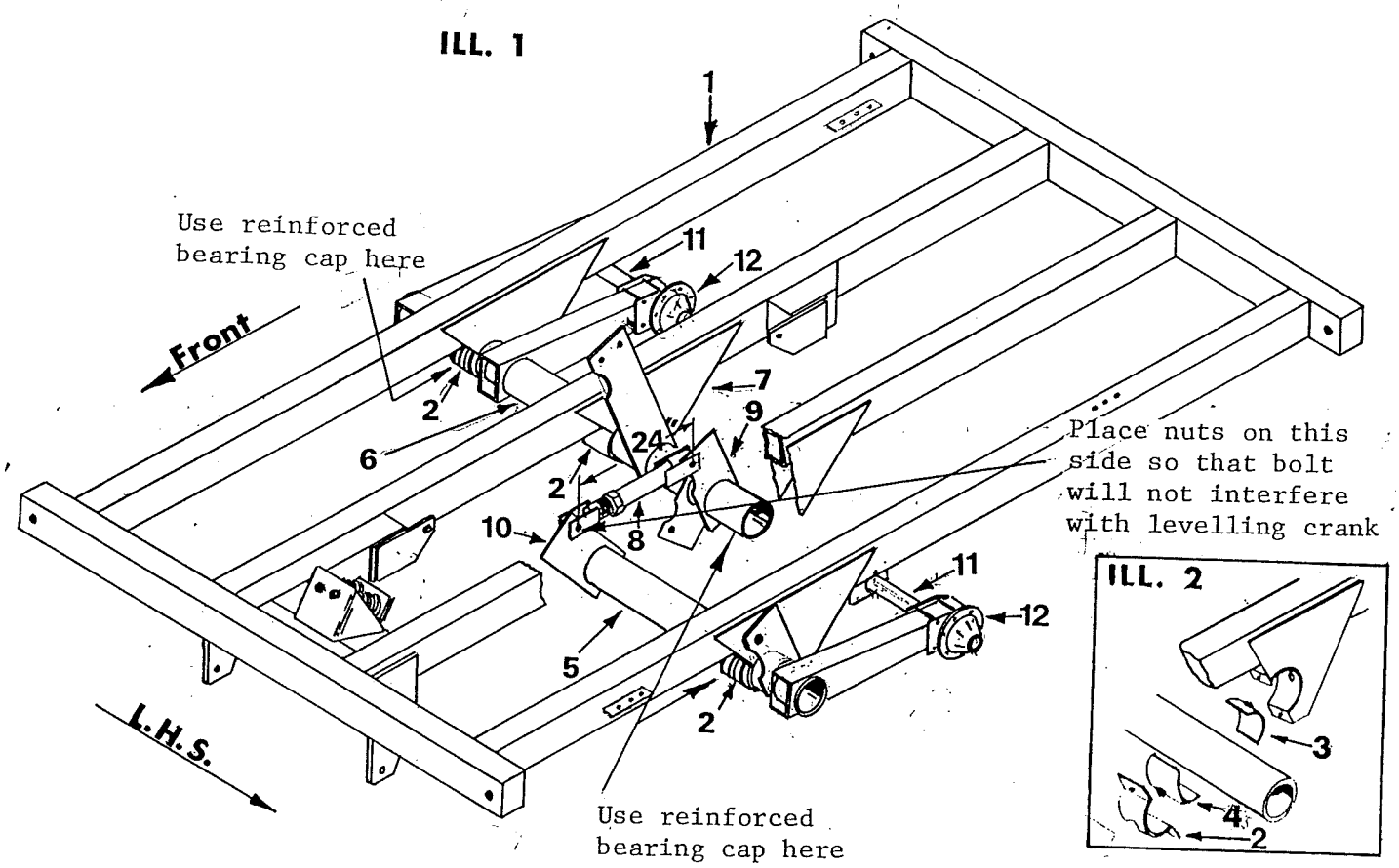

ASSEMBLY INSTRUCTIONS

1. Raise frame assembly, arrow 1, approximately 46" from gound and block securely.

2. See ILL. 1 and 2. Lubricate bearing surface of each rockshaft, then remove rockshaft, bearing cap, arrow 2, from each rockshaft bearing. Next place one bearing liner, arrow 3, in each bearing, use liner with 45 degree grease fitting. Install L.H. rockshaft, arrow 5, into two bearings on L.H. side of main frame assembly. Position rockshaft so that outside bearing is positioned between wheel legs. Place bearing liner, arrow 4, over rockshaft, use liner with straight grease fitting, then fasten rockshaft to each bearing with one bearing cap, arrow 2. Install necessary shims between bearing cap and bearing. See Note below.

   Next place R.H. rockshaft, arrow 6, into three bearings on R.H. side of main frame assembly. Position rockshaft so that the outside bearing is positioned between wheel legs. Centre bearing, arrow 7, must be located between two cleats welded to rockshaft. Place bearing liner, arrow 4, over rockshaft. Use liner with straight grease fitting, then fasten rockshaft to each bearing with one bearing cap, arrow 2, with necessary shims.

   NOTE: It will be necessary to install shims between half-clamp, arrow 2, and rockshaft bearing, to allow rockshaft bearing to turn freely in bearing when half clamp bolts are tightened. It is important to install correct number of shims, rockshaft must be snug but free to turn.

3. See ILL. 1. Adjust rockshaft link, arrow 8, so centre to centre distance between holes is 24". Next fasten female half of rockshaft link to rockshaft arm, arrow 9, with one 1¼" x 4¼" hex bolts c/w nuts and lockwasher. Then fasten male half of link to rockshaft arm, arrow 10. Tighten bolts.

4. See ILL. 1. Place a wheel leg spacer, arrow 11, between wheel legs of each rockshaft. Next bolt one 8 bolt hub assembly, arrow 12, to outside of each wheel leg with 5 -5/8" x 6" bolts c/w nuts and lockwashers. Tighten bolts. Be sure to use hub assembly marked "3600".

5. Bolt wheel and tire assembly to 8 bolt hub assembly and tighten bolts. NOTE: If 6 ply tires are ordered for wings be sure they are not used under centre sections. Centre section wheels must have 12 ply tires. Use WH10L x 16 8 bolt wheel and 12.5 x 16 tire.

6. See ILL. 3. Attach lock-up strap arrow 1, to lug, arrow 2, on main frame with one 1" x 3" hex bolt, c/w nut and lockwasher. Next attach lock-up strap, arrow 1 to cylinder arm, arrow 3, of R.H. rockshaft with 1 pin, arrow 4, secure pin with 1 hair pin cotter. This will lock main frame wheels in down position.

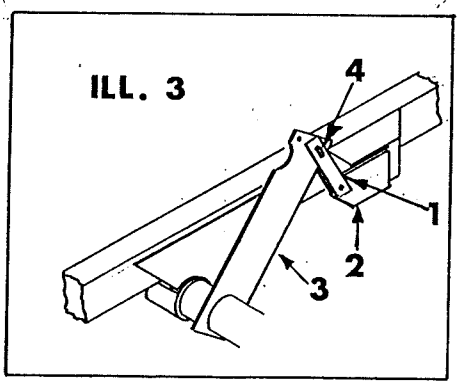

⚠ CAUTION: USE ADEQUATE MANPOWER OR A HOIST TO LIFT HEAVY COMPONENTS IN PLACE. ATTEMPTING TO LIFT HEAVY COMPONENTS BY YOUR SELF COULD CAUSE SERIOUS INJURY.

⚠ CAUTION: SUPPORT MAIN FRAME AND WING FRAME SECURELY BEFORE ASSEMBLING COMPONENTS. HEAVY FRAME COULD CAUSE SERIOUS INJURY IF THEY FELL.

A CAREFUL OPERATOR IS THE BEST

INSURANCE AGAINST AN ACCIDENT

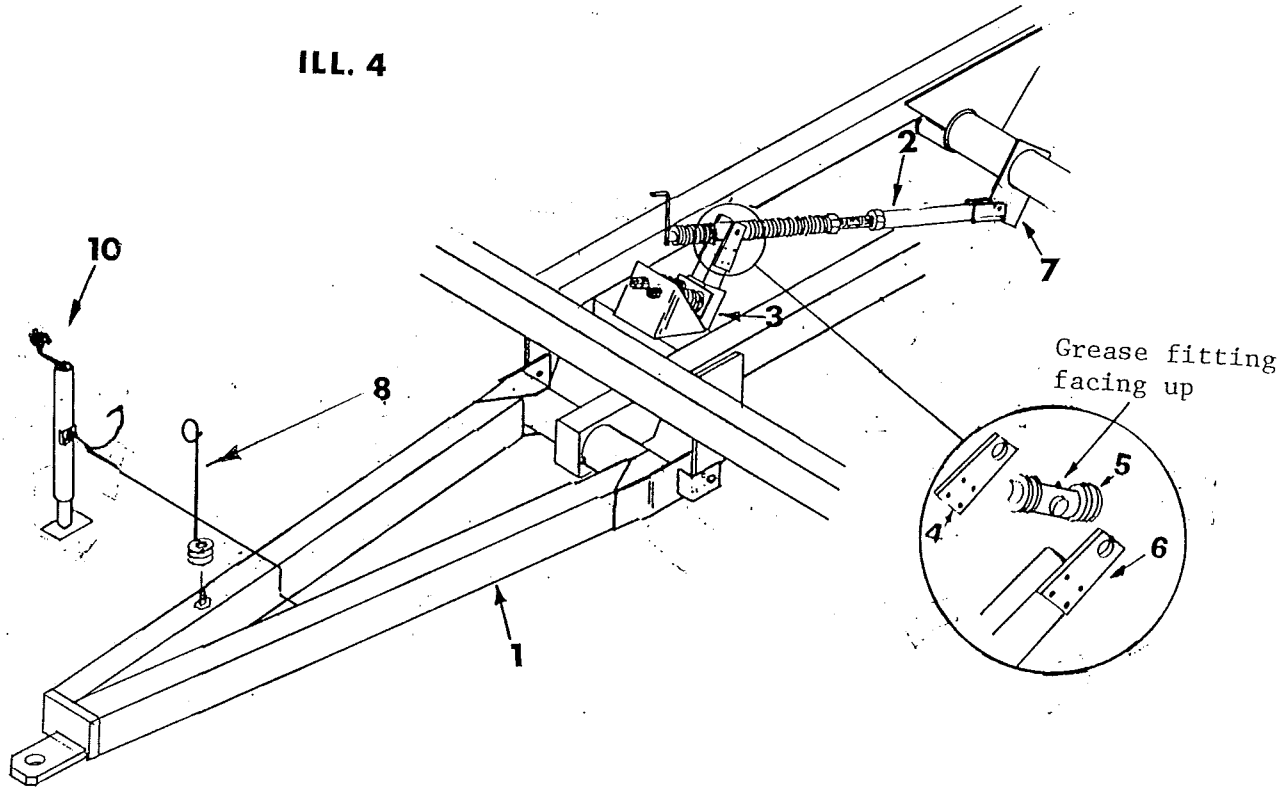

7. See ILL. 4. Attach tongue and draw bar assembly, arrow 1, to hitch lugs on main frame with 2 -1½" dia. pins. Secure each pin with 2 -5/16" x 2¼" cotter pins.

8. See ILL. 4 to attach levelling link, arrow 2, to levelling arm, arrow 3, remove bolt on lug, arrow 4. Then place bearing tube, arrow 5, between weld on lug, arrow 6, and bolt on lug with ears of bearing tube installed in 1" diameter holes of lugs. Fasten bolt-on lug, arrow 4, to arm, arrow 3 with 4 -½" x 5" hex bolts c/w nuts and lockwashers. Tighten bolts.

9. See ILL. 4. Attach clevis end of levelling link, arrow 2, to arm, arrow 7, on R.H. rockshaft. Fasten with one 1¼" x 4¼" bolt.

   NOTE: The 1¼" x 4¼" bolt must be tight so that the clevis is drawn up tight against the ball joint in arm, arrow 7. Ball must also be free to pivot in socket.

10. See Ill. 4. Fasten hose support, arrow 8 to R.H. side of hitch. Locate hose support to angle iron welded to the top of hitch, secure with one 5/8" x 1-3/4" N.C. hex. bolt. Be sure to place flatwasher over slotted hole in support.

11. See ILL. 4. Fasten hitch (clevis or tongue type), arrow 9, to tongue and draw bar assembly with 4 -1" x 2½" N.C. hex bolts, c/w nuts and lockwashers. Tighten bolts. Be sure bolts are kept tight.

12. See Ill. 4 Mount hitch jack, arrow 10, on round tube welded to inside of hitch. Jack pivots on mounting tube and can be placed in vertical position for supporting disc hitch, or horizontal position while disc is in motion. Lock jack in desired position with pin.

IMPORTANT: Jack must be in horizontal position when disc is in motion. If jack is in vertical position when disc is in motion, jack may strike ground or obstruction on ground, causing severe damage to jack. Be sure crank of jack is not hanging below hitch when jack is in horizontal position. Place crank on top of hitch to avoid damage.

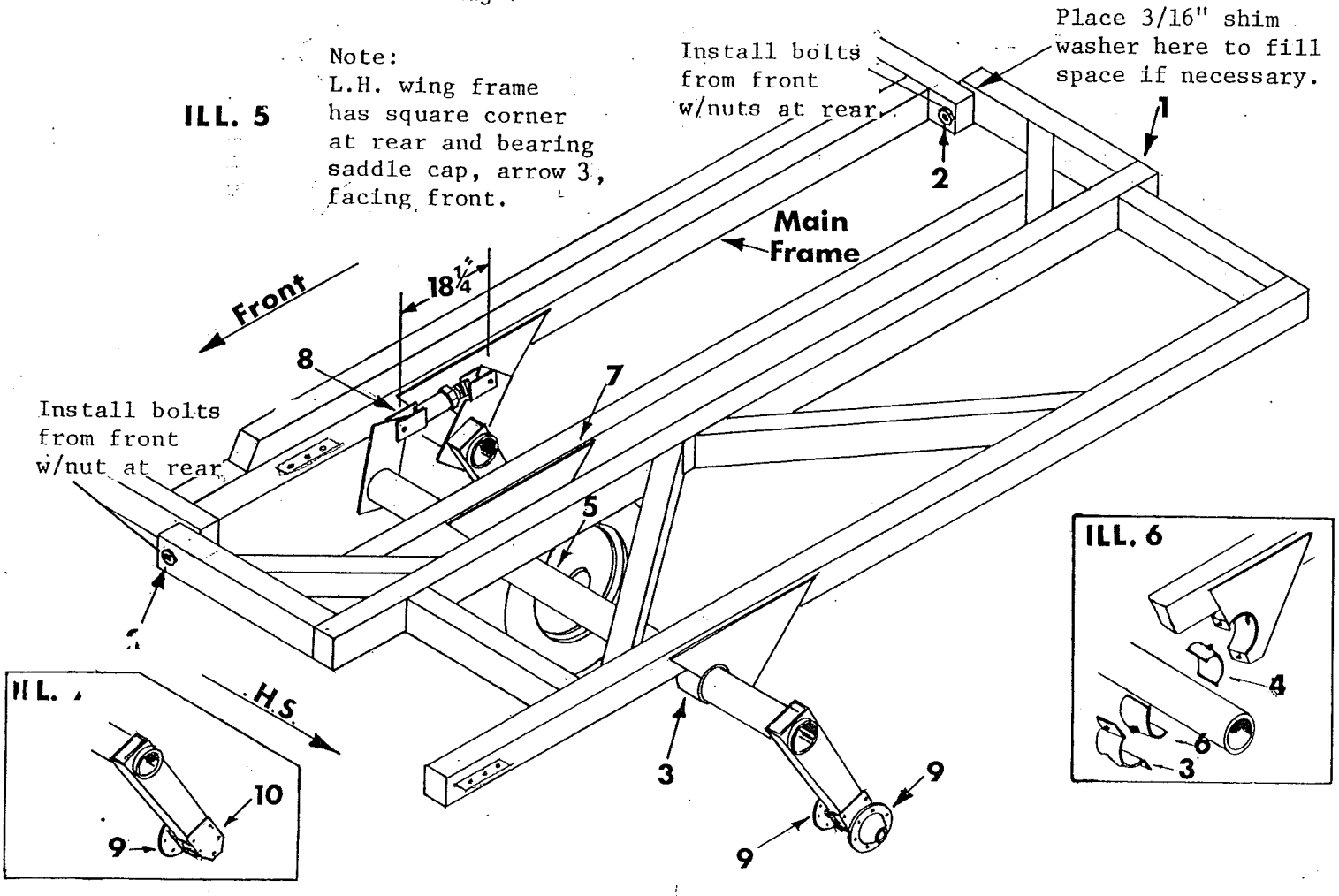

13. See ILL. 5. Attach L.H. wing assembly, arrow 1, to L.H. side of main frame. Fasten with two 2" bolts, arrow 2. Bolts are installed from front with nuts and washer at rear. Front hinge bolt must be tightened so there is no clearance between wing frame and main frame. Do not over tighten front bolt, wing must be free to pivot.

When installing rear hinge bolt, place one 3/16" thick shim washer (if shim is required) between wing frame and main frame. Then install nut and washer (½") thick and tighten rear bolt so nut is snug. DO NOT OVER TIGHTEN Next, install cotter pins in slotted nuts.

NOTE: To determine which is the proper wing frame for L.H. side, see ILL. 5. L.H. frame has square corner end at rear with bearing cap, arrow 3, facing front.

14. See ILL. 5 & 6. Lubricate bearing surface of L.H. wing rockshaft. Remove rockshaft bearing cap, arrow 3, from each rockshaft bearing. Next, place one bearing liner, arrow 4, in each rockshaft bearing, use liner with 45 degree grease fitting. Install L.H. wing rockshaft, arrow 5, in bearing as shown in ILL. 5. Be sure proper rockshaft is used, wheel leg must point toward rear with notch in cylinder arm facing rear. Position rockshaft so that the inside bearing, arrow 7, is positioned between two cleats welded to rockshaft. Place bearing liner, arrow 6, over rockshaft, use liner with straight grease fitting. Then fasten wing rockshaft to each bearing with one bearing cap, arrow 3. NOTE: It will be necessary to install shims between half clamp, arrow 3, and rockshaft bearing to allow rockshaft to turn freely in bearing when half clamp bolts are tightened. It is important to install the correct number of shims, rockshaft must be snug but free to turn.

15. See ILL. 5. Adjust wing rockshaft link, arrow 8, so centre to centre distance between holes is 18¼". Next fasten female half of rockshaft link to wing rockshaft arm with one 1¼" x 4¼" bolt. Then fasten male end of link to link arm of main frame rockshaft with one 1¼" x 4¼" bolt. NOTE: The 1¼" x 4¼" bolt must be tightened so that the clevises of the rockshaft link are drawn up tight against the ball joint in the rockshaft arms. Ball must be free to pivot socket.

16. (A) DUAL WHEELS: See ILL. 5. Fasten 1 - 8 bolt hub assembly, arrow 9, to each side of each rockshaft wheel leg. Fasten with 5 - 5/8" x 6" N.C. hex. bolts, c/w nuts and lockwashers and tighten bolts. Be sure to use hub assembly marked "3600".

    (B) SINGLE WHEELS: See ILL. 7. Fasten 1 - 8 bolt hub assembly, arrow 9, to inside of each wheel leg, fasten with 1 backing plate, arrow 10, and 5 -5/8" x 6" N.C. hex bolts, c/w nuts and lockwashers. Tighten bolts. Be sure to use hub assemblies marked "3600".

17. Bolt wheel and tire assembly to 8 bolt hub assembly and tighten bolts. Use WH10 X 16 8 bolt wheel and 12.5L x 16 tire.

⚠ CAUTION: WHEN ASSEMBLING DISC USE ALIGNING PUNCH TO LINE UP HOLES. KEEP FINGERS OUT OF HOLES.

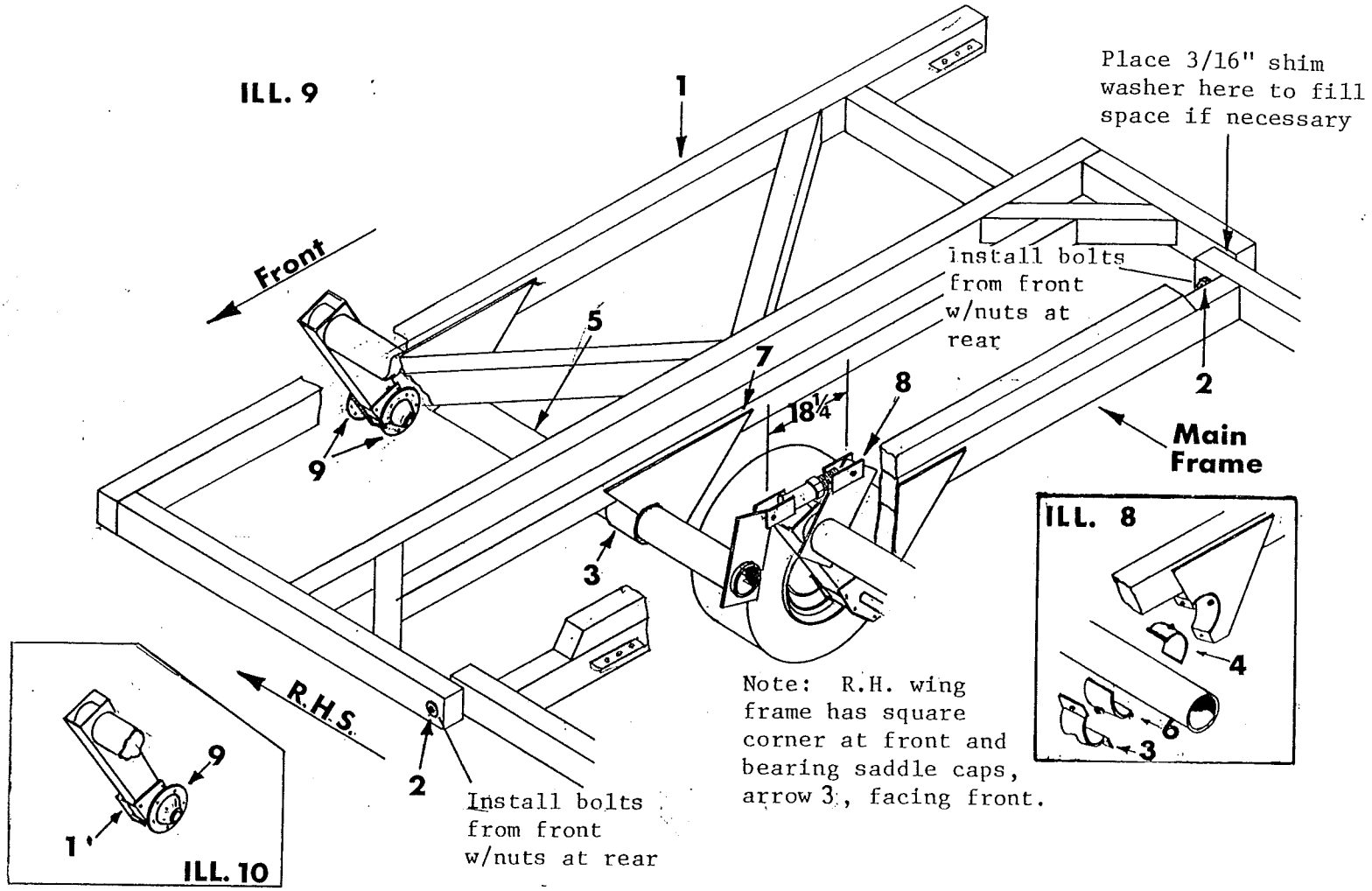

18. See ILL. 9. Fasten R.H. wing assembly, arrow 1, to R.H. side of main frame. Fasten with two 2" bolts, arrow 2. Bolts are installed from front with nuts and washers at rear. Front hinge bolt must be tightened so there is no clearance between wing frame and main frame. Do not over tighten front bolt, wing must be free to pivot.

When installing rear hinge bolt, place one 3/16" thick shim washer (if shim is required) between wing frame and main frame. Then install nut and washer (½") thick and tighten rear bolts so nut is snug. DO NOT OVER TIGHTEN. Next, install cotter pins in slotted nuts.

NOTE: To determine which is the proper wing frame for R.H. side, see ILL. 9, R.H. wing frame has square corner end at front with bearing caps, arrow 3, facing the front.

19. See ILL. 9 & 8. Lubricate bearing surface of R.H. wing rockshaft. Remove rockshaft bearing caps, arrow 3, from each rockshaft bearing. Next place one bearing liner, arrow 4, in each rockshaft bearing. Use liner with 45 degree grease fitting. Install R.H. wing rockshaft, arrow 5, in bearing as shown in ILL. 9. Be sure proper rockshaft is used, wheel leg must point toward rear with notch in cylinder arm facing rear. Position rockshaft so that the inside bearing, arrow 7, is positioned between two cleats welded to rockshaft. Place bearing liner, arrow 6, over rockshaft, use liner with straight grease fitting. Then fasten wing rockshaft to each bearing with one bearing cap, arrow 3.

NOTE: It will be necessary to install shims between half clamp, arrow 3, and rockshaft bearing to allow rockshaft to turn freely in bearing when half clamp bolts are tightened. It is important to install the correct number of shims, rockshaft must be snug, but free to turn.

20. See ILL. 9. Adjust wing rockshaft link, arrow 8, so centre to centre distance between holes is 18¼". Next fasten female half of rockshaft link to wing rockshaft arm with one 1¼" x 4¼" bolt. Then fasten male end of link to link arm of main frame rockshaft with one 1¼" x 4¼"bolt. NOTE: The 1¼" x 4¼" bolt must be tightened so that the clevises of the rockshaft link are drawn up tight against the ball joint in the rockshaft arms, ball must be free to pivot in socket.

21. (A) DUAL WHEELS: See ILL. 9. Fasten 1 8 bolt hub assembly, arrow 9, to each side of each rockshaft wheel leg. Fasten with 5 -5/8" x 6" N.C. hex bolts c/w nuts and lockwashers. Tighten bolts. Be sure to use hub assemblies marked "3600".

(B) SINGLE WHEELS: See ILL. 10. Fasten 1 8 bolt assembly, arrow 9, to inside of each wheel leg. Fasten with 1 backing plate, arrow 10, and 5 -5/8" x 6" N.C. hex bolts c/w nuts and lockwashers. Tighten bolts. Be sure to use hub assemblies marked "3600".

22. Bolt wheel and tire assembly to 8 bolt assembly and tighten bolts. Use WH10L x 16 8 bolt wheel and 12.5 x 16 tire.

YOUR SAFETY

IS IN YOUR HANDS

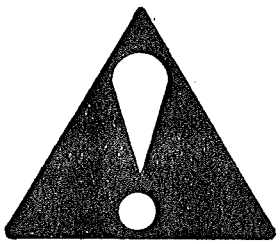

BE ALERT.....

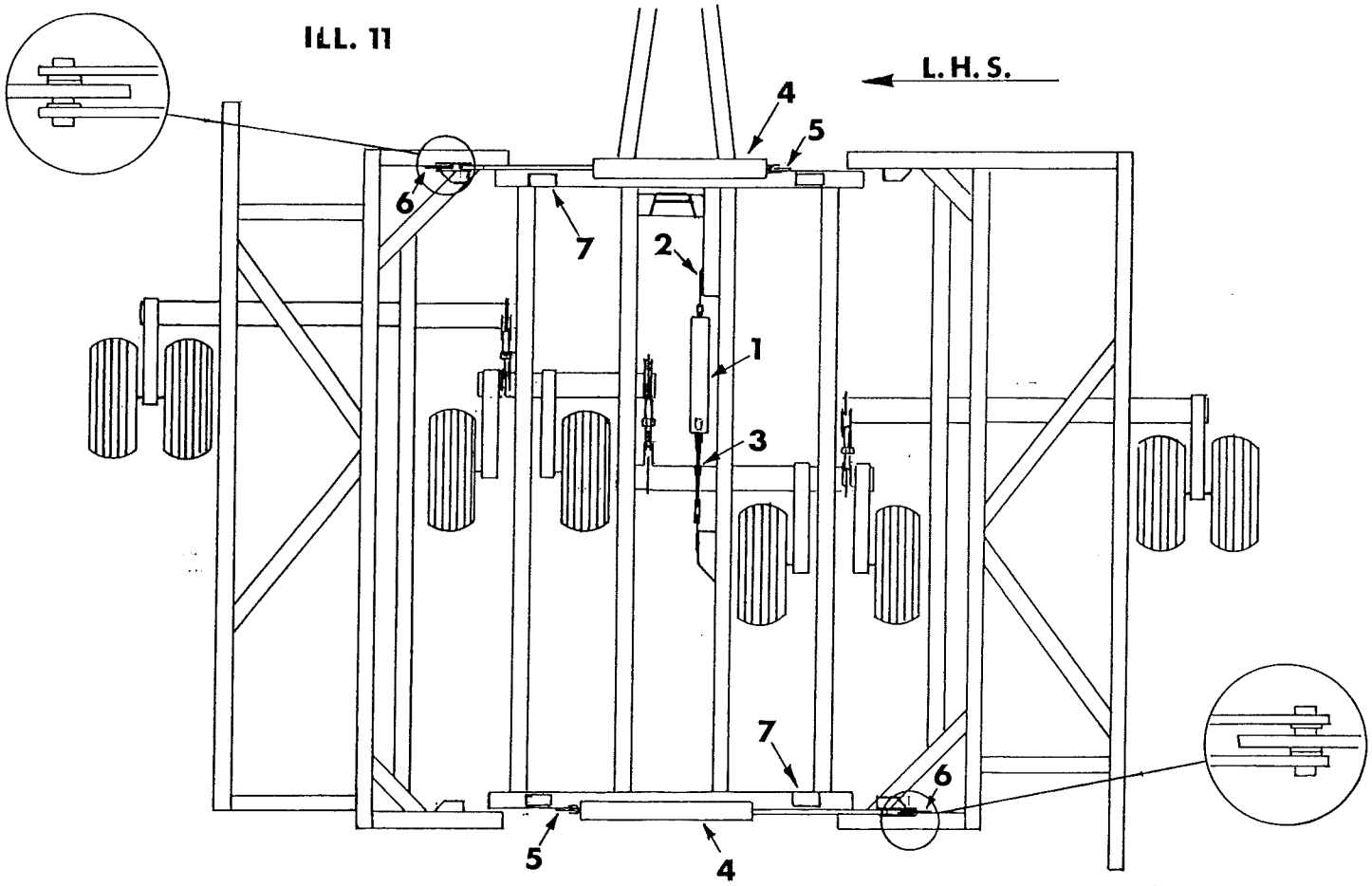

23. See ILL. 11. Fasten tube end of 5" x 24" rockshaft cylinder, arrow 1, to lug, arrow 2, on main frame. Ports on cylinder must be facing towards L.H.S. Next extend cylinder and attach shaft end of cylinder to rockshaft cylinder arm, arrow 3. Secure cylinder pins with ¼" x 2" cotter pins.

24. See ILL. 11 Fasten two 5" x 36" wing lift cylinders, arrow 4, to front and rear of disc. Fasten tube end of each cylinder to lug, arrow 5, on main frame. Position each cylinder with ports facing towards inside of disc. Then extend both wing lift cylinders and attach shaft end of each cylinder to slotted hole in lug, arrow6, on wing frames. Secure cylinder pins with ¼" x 2" cotter pins. When installing pin on shaft end, place ¼ washer between clevis. Install washer on inside of slotted lug

REMEMBER!!!

ONLY YOU CAN PREVENT ACCIDENTS.

⚠ CAUTION: DO NOT STAND UNDER WING WHILE WING IS BEING RAISED OR LOWERED. IF ANY COMPONENT SHOULD FAIL, OR IF HYDRAULIC LEVER SHOULD ACCIDENTLY BE OPERATED, WING COULD DROP.

⚠ CAUTION: WHEN TRANSPORTING DISC, ALWAYS LOCK ROCKSHAFT BY ENGAGING LOCK-UP STRAP. IF ANY COMPONENTS SHOULD FAIL, OR IF HYDRAULIC LEVER SHOULD BE ACCIDENTLY OPERATED, DISC COULD DROP.

ILL. 12

NOTE: The 32' and 32½' models are available with solid gang beams on wings, or with folding gang beams on both front and rear, as shown below. The 28½', 29' and 29½' models are available with solid gang beams or with folding beams on rear gangs only. The 25', 26½' models are not available with folding gang beams.

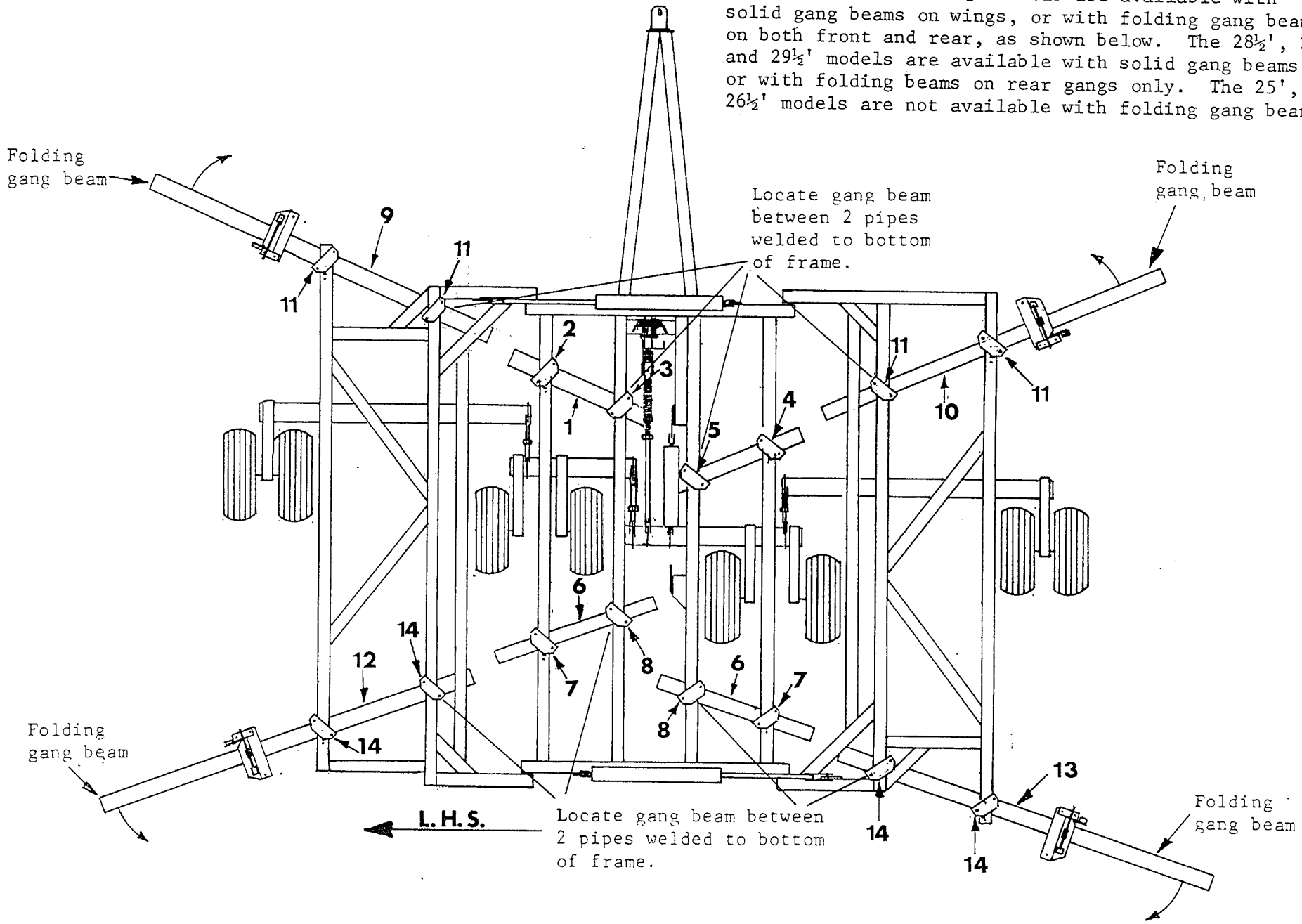

25. ATTACHING GANG BEAMS - See ILL. 12

NOTE: See gang beam chart on Page 28 to determine lengths for the size of your disc.

(A) FRONT MAIN FRAME GANG BEAMS- Fasten one front gang beam, arrow 1, to each side of main frame. Locate each beam between 2 welded pipes at bottom of frame.

Fasten L.H. front gang beam to bottom of main frame with 2 sets of clamp plates, arrows 2 and 3. Each clamp plate set has 2 clamps and 2 -1¼"x dia. bolts. The outside clamp plate set, arrow 2, uses 1¼" x 18½" bolts. Position clamp plates as shown. Do not tighten.

Fasten R.H. front gang beam to bottom of main frame with 2 sets of clamp plates, arrows 4 & 5. The outside clamp plate set, arrow 4, uses 1¼" x 18½" bolts. The inside clamp plate set, arrow 5 uses 1¼" x 14" bolts. The L.H. bolt of inside clamp plate set, arrow 5, is installed through a retainer bracket welded to side of frame. Position clamp plates as shown. Do not tighten bolts.

(B) REAR MAIN FRAME GANG BEAMS - Fasten one rear gang beam, arrow 6, to each side of main frame. Locate each beam between 2 welded pipes at bottom of frame.

Fasten each rear gang beam to bottom of main frame with 2 sets of clamp plates, arrow 7 & 8. The outside clamp plate sets, arrow 7, use 1¼" x 18½" bolts. The two inside clamp plate sets, arrow 8, uses 1¼" x 14" bolts. Position clamp plates as shown . Do not tighten bolts.

(C) FRONT WING FRAME GANG BEAMS - Fasten one front gang beam, arrow 9 & 10, to each wing frame. Locate each beam between 2 welded pipes at bottom of frame. Fasten each front gang beam, arrow 9 & 10 to bottom of wing frame with 2 clamp plate sets, arrow 11. Wing clamp plate sets use 1¼" x 14" bolts. Position clamp plates as shown. Do not tighten bolts

(D) REAR WING FRAME GANG BEAMS - Fasten each rear gang beam, arrow 12 and 13 to bottom of wing frame. Locate each beam between 2 welded pipes at bottom of frame. Fasten each rear gang beam, arrow 12 and 13 to bottom of wing frame with 2 clamp plate sets, arrow 14. Wing clamp plate sets use 1¼" x 14" bolts. Position clamp plates as shown. Do not tighten bolts.

NOTE: If your disc is equipped with folding wing gangs, see Section 26 before installing gang beams.

(E) To start with, set all gang beams at the centre holes. See Section 1 of ADJUSTMENTS.

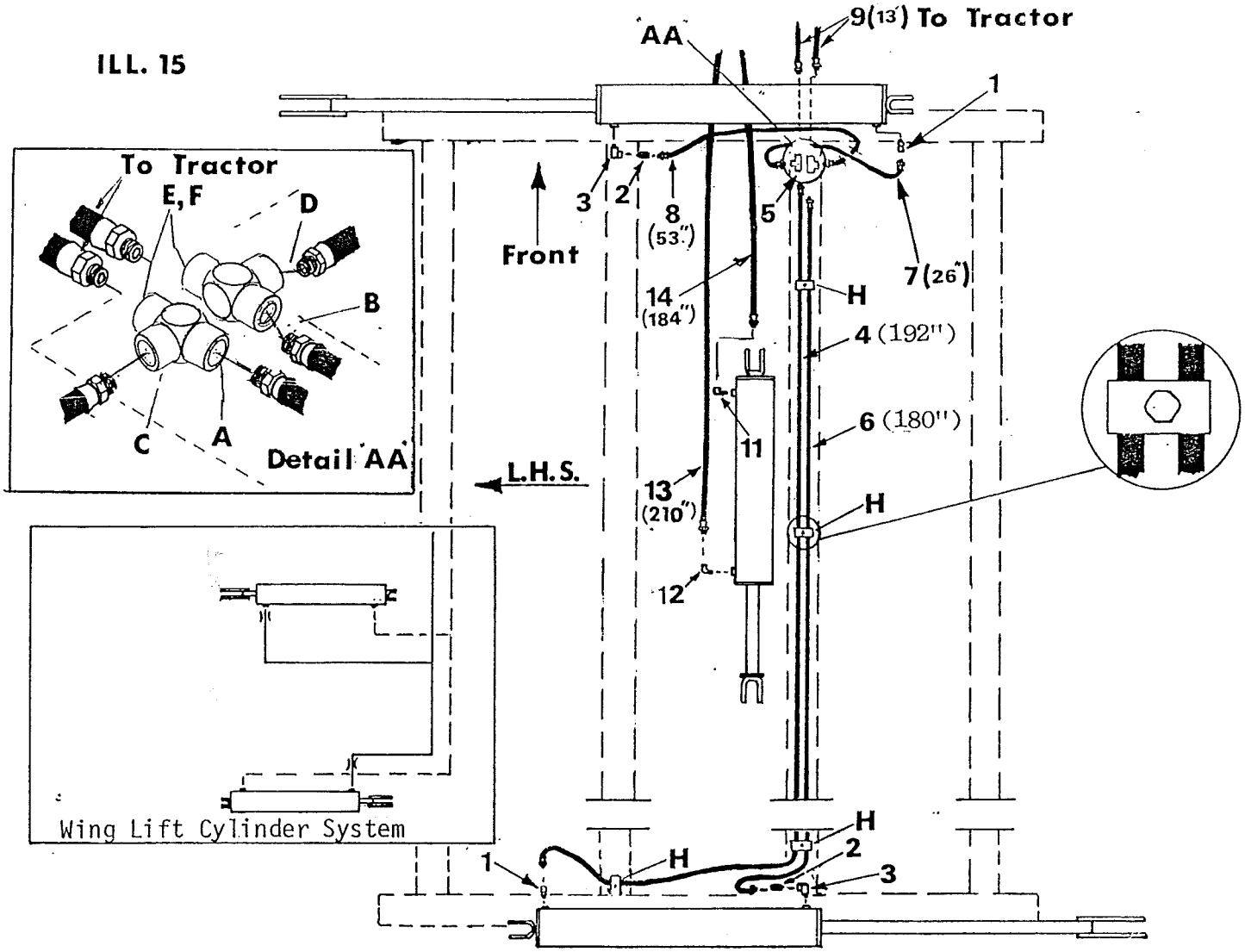

27. ATTACHING WING LIFT CYLINDER HOSES - See ILL. 15

NOTE: To ensure that the hydraulic system does not leak, seal the fittings and hoses with paint or other sealing liquid.

(a) Install one (1) 3/8" male-female swivel, arrow 1, in the piston end port of each wing lift cylinder.

(b) Install one (1) 3/8" street elbow, arrow 3, in the shaft end port of the each wing lift cylinder. Then install one (1) 3/8" restricted orifice male-female swivel (this fitting is red in color) arrow 2, in each 3/8" street elbow.

(c) Fasten one (1) 3/8" x 192" hydraulic hose, arrow 4, to hole 'A' in the 3/8" tee, arrow 5, on top of the main frame. Then fasten the opposite end of the same hose to the 3/8" male-female swivel, arrow 1, in the piston end of the rear wing lift cylinder. See Detail "AA".

(d) Fasten one (1) 3/8" x 180" hydraulic hose, arrow 6, to hole 'B' in the 3/8" tee, arrow 5, on top of the main frame. Then fasten the opposite end of the same hose to the 3/8" restricted orifice male-female swivel, arrow 2, in the shaft end port of the rear wing lift cylinder. Fasten the 3/8" hoses to the frame with one (1) U-shaped retaining clip for each hose hold-down point, arrow H, with one (1) ½" x 3/4" hex. bolt. Each hold-down point has a ½" hex. nut welded to the top of the frame.

(e) Fasten one (1) 3/8" x 26" hydraulic hose, arrow 7, to hole 'C' in the 3/8" tee, arrow 5, on top of the main frame. Then fasten the opposite end of the same hose to the 3/8" male-female swivel, arrow 1, in the piston end of the front wing lift cylinder. See Detail "AA".

26. INSTALLING FOLDING TYPE WING GANG BEAMS - See ILL. 12.
Some models are equipped with folding gang beams to give a low transport height. See gang beam chart on Page 28 , for models equipped with folding gang beams and size of beam for each model Wing type gang beams are made so that the wing is sloped up slightly, therefore, there are left hand and right hand gang beams. The top side of gang beam will be marked. Position folding gang beams as shown in ILL. 12 ., with front gang beams folding towards front and rear beam folding towards rear. BE SURE SIDE OF BEAM MARKED "TOP" IS FACING UP.

IMPORTANT: Front folding type gang beams fold towards front of disc, and rear beams fold towards rear.

IMPORTANT

KEEP GANG BEAM CLAMP BOLTS TIGHT

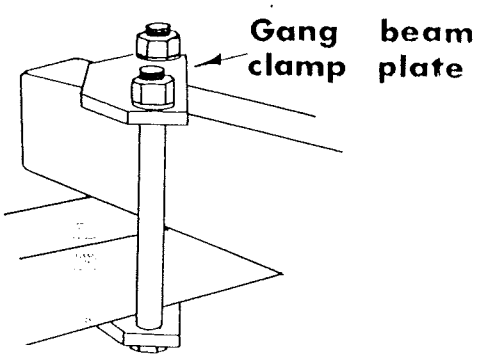

ILL. 13

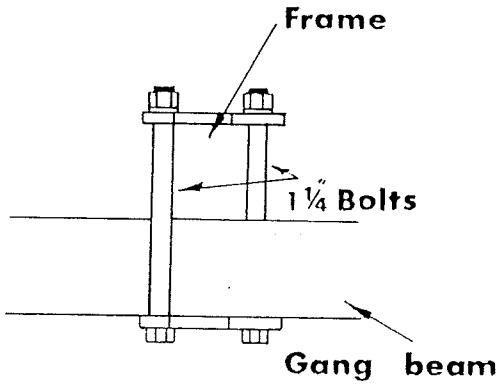

ILL. 14

IMPORTANT: When tightening gang beam clamp plates (shown in ILL. 13). be sure the 1¼" diameter bolts are placed tight against frame, as shown in ILL. 14.

The 1¼" clamp bolts MUST be kept tight at all times. If clamp bolts are loose serious damage will occur to frame gang beam, clamp plate and 1¼" bolts.

(f) Fasten one (1) 3/8" x 53" hydraulic hose, arrow 8, to hole 'D' in the 3/8" tee , arrow 5 on top of the main frame. Then fasten the opposite end of the same hose to the 3/8" restricted orifice male-female swivel (this fitting is red in color), arrow 2, in the shaft end port of the front wing lift cylinder. See Detail "AA".

(g) Fasten two (2) 3/8" x 13' hoses, arrow 9, in holes 'E' & 'F' in the 3/8" tee , arrow 5, on top of the main frame.

28. ATTACHING ROCKSHAFT CYLINDER HOSES - SEE ILL. 15.

(a) Fasten one (1) 1/2" street elbow, arrow 11 and 12, in each port of the Rockshaft Lift Cylinder. Then fasten one (1) 1/2" x 210" hydraulic hose, arrow 13, to the 1/2" street elbow, arrow 12, in shaft end port of the Rockshaft Cylinder. Then fasten one (1) 1/2" x 184" hydraulic hose, arrow 14, to the 1/2" street elbow, arrow 11, in barrel end port of the Rockshaft Cylinder

29. Pump oil into the cylinders. Before filling the cylinders with oil, remove the cylinder pins from the shaft end of each cylinder. This will allow you to fill the cylinders safely without activating the rockshaft or folding the wings. Extend and contract the cylinders until they are completely filled with oil. Then extend all the cylinders and pin each cylinder to the proper lugs.

CAUTION: BEFORE OPERATING WING LIFT CYLINDERS, REMOVE CYLINDER PIN FROM SHAFT END OF EACH CYLINDER AND PUMP OIL INTO CYLINDERS. EXTEND AND CONTRACT CYLINDERS UNTIL IT IS COMPLETELY FILLED. WINGS WILL FREE FALL IF CYLINDERS ARE NOT FILLED WITH OIL, CAUSING SERIOUS DAMAGE.

CAUTION: HYDRAULIC OIL ESCAPING UNDER PRESSURE HAS SUFFICIENT FORCE TO CAUSE SERIOUS INJURY. IF INJURED BY ESCAPING FLUID, OBTAIN MEDICAL TREATMENT IMMEDIATELY.

CHECK HYDRAULIC HOSES PERIODICALLY FOR SIGNS OF RUPTURE AND LEAKS. USE A CARD BOARD AS BACKSTOP TO CHECK FOR ESCAPING HIGH PRESSURE OR HOT FLUID.

CAUTION: DO NOT DISCONNECT HYDRAULICALLY OPERATING COMPONENTS WHEN THERE IS PRESSURE WITHIN THOSE COMPONENTS. HYDRAULIC COMPONENTS UNDER PRESSURE, MAY CAUSE PARTS AND HYRAULIC FLUID TO FLY OUT AT A HIGH VELOCITY WHICH COULD CAUSE SERIOUS INJURY.

CAUTION: DO NOT STAND UNDER WINGS WHILE WINGS ARE BEING RAISED OR LOWERED. IF ANY COMPONENETS OF HYDRAULIC SYSTEM SHOULD FAIL, OR IF HYDRAULIC LEVER SHOULD ACCIDENTLY BE OPERATED, WINGS COULD DROP.

ILL. 16 32½ Model

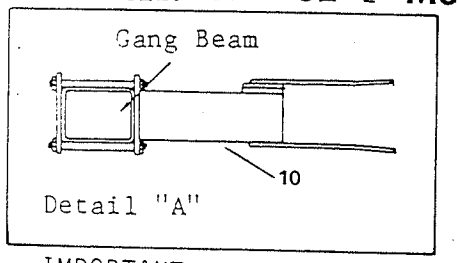

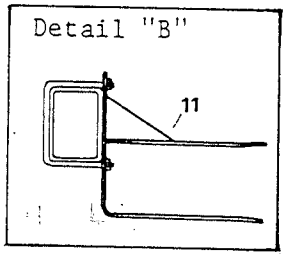

IMPORTANT: Front centre frame gang overlap (2½") must not exceed 2½". If gangs are moved in too far, wing gang may interfere with centre frame.

IMPORTANT: For models equipped with folding gang beams place gang beam so that inside edge of hinge plate is even with cutting edge of blade. This also applies to L.H. gang beam.

IMPORTANT Tighten clamp plates, arrow 9, and thrust blocks, arrow 8, very tight to prevent lateral movement of gang beams. Also be sure bearing U-bolts are tight enough to prevent gangs sliding on gang beam.

VERY IMPORTANT: When raising wings for transport for first time after adjusting gangs, raise wings slowly making sure wing gangs clear centre frame gangs and centre beam. Also, make sure rear wing gangs have enough clearance to pass by each other. If rear wing gang angle is not the same on both sides, gangs will interfere with each other when wings are folded.

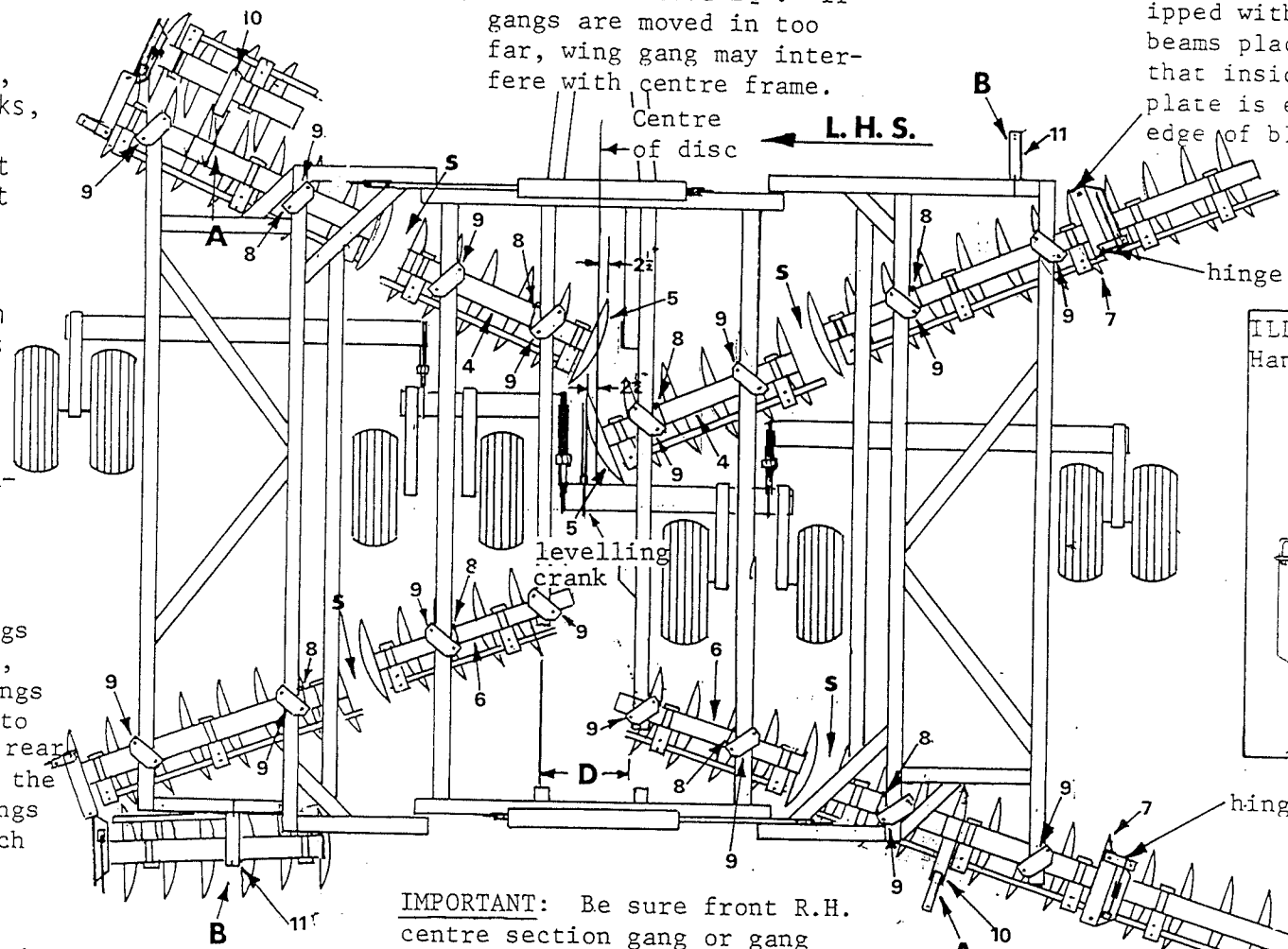

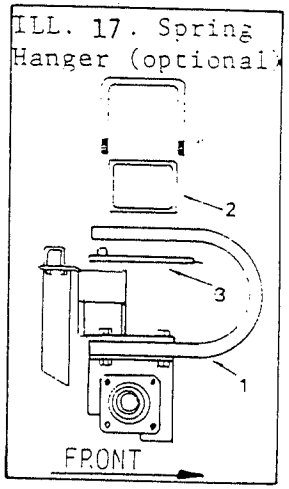

IMPORTANT: Spacing between wing gangs and centre frame gangs, arrow S, MUST NOT be less than blade spacing. If gangs are set too close the two gangs may interfere with each other or centre frame, when wing is folded.

IMPORTANT: Be sure front R.H. centre section gang or gang beam, arrow 4, does not interfere with levelling crank.

IMPORTANT For models equipped with folding gang beams place gang beam so that inside edge of hinge plate is even with cutting edge of blade. L.H. gang beam also.

30. ATTACHING GANG ASSEMBLIES - See ILL. 16.

NOTE: See gang arrangements on Page 29 to 34 to . Determine gang arrangements for your disc.

(A) REAR GANGS - Roll rear gang assemblies in place under rear gang beams. Position rear gangs so that the scrapers are at the rear. The gang assemblies with outrigger blades (small diameter blades) must be positioned at the outside. See ILL. 16 for the direction rear gangs face.

Attach bearing hangers to gang beam with 2 U-bolts per bearing hanger. If disc is equipped with optional spring bearing hangers, see step "C" to attach hangers.

(B) FRONT GANGS - Roll front gang assemblies in place under front gang beams. Position gang assemblies so that the scrapers are at the rear. See ILL. 14 for the direction the front gangs face.

Attach bearing hangers to gang beams with 2 U-bolts per bearing hanger. Leave U-bolts loose. If disc is equipped with optional spring bearing hangers, see Step "C" to attach hangers.

(C) See ILL. 17. If disc is equipped with optional spring bearing hangers, fasten each spring hanger assembly, arrow 2, with one backing plate, arrow 3, and 2 -U-bolts. Be sure the pin which is welded to backing plate, arrow 3, is installed in slot of spring shank.

(D) Before positioning gangs on beams, set gang angle. See Section 1 of Gang Adjustments.

(E) See ILL. 16. Set front centre frame gangs, arrow 4, so that the leading edge of inside blade, arrow 5, on gang is 2½" past the centre of disc frame.

IMPORTANT: Be sure front R.H. centre section gang or gang beam, arrow 5, does not interfere with levelling clamp.

(F) See ILL. 16. Adjust spacing between each front gang assembly, arrow S. The spacing would be the same as the blade spacing in the gang assemblies.

IMPORTANT: Be sure excess gang beam does not extend too far into space between main frame gangs,arrow S. If gang beams are too close together, beams could interfere with each other when wings flex.

(G) See ILL. 16. Set rear centre frame gangs, arrow 6, so that the distance between rear edge of the two inside blades, dimension "D" is equal to the blade diameter. Be sure rear gangs are centred.

(H) See ILL. 16. If your model is equipped with folding gang beams, position gangs on bearings so that the inside of hinge plates are even with cutting edge of end blade, arrow 7. Proper hinge location is necessary to allow gang go fold without interference.

(I) See ILL. 16. Adjust spacing between rear gang assembly, arrow S. This spacing should be the same as the blade spacing in the gang assemblies.

(J) Before tightening bearing U-bolts, loosen U-bolts which fasten scraper bar to bearing hanger. Then check each bearing hanger to make sure hanger is sitting square under gang beam. Also, be sure hanger is not turned to one side. Next tighten U-bolt.

IMPORTANT: If bearing hangers are not sitting square BEFORE TIGHTENING U-bolts, thrust will be buildt into the bearings and the life of the bearing will be shortened.

31. See ILL. 16. Using one U-bolt, fasten one thrust block, arrow 8, to top of each gang beam. See ILL. 16 for proper position of each thrust block. Be sure each thrust block is tight against frame.

IMPORTANT: See ILL. 16 after gangs have been adjusted, tighten gang beam clamp plates, arrow 9, and thrust blocks, arrow 8, very tight to prevent lateral movement of gang beam. Also, be sure bearing U-bolts are tight enough to prevent gang sliding on gang beams.

Tighten gang beam clamp plates with 1-15/16" box end three foot length wrenches, which are supplied with disc.

32. ATTACHING FOLDING GANG BEAM SUPPORT BRACKET - See ILL. 16
(For models equipped with folding type wing beams) See Detail "A" and "B" for type of support bracket used for each gang beam.

(A) FRONT SUPPORT - Supplied on , 32', and 32½' Models only. Fasten support bracket, arrow 10, to front left hand gang beam. Fasten with one backing plate and 4 -5/8" x 7½" bolts. Position so that bracket is located between the 2 bearing hangers on the folding beam, when beam is folded.

Fasten support bracket, arrow 11, to front right hand corner wing frame. Fasten with one U-bolt. Position so that bracket is located between the 2 bearing hangers on the folding beam, when beam is folded.

(B) REAR SUPPORTS - Supplied on 28½, 29', 29½, 32' and 32½' models with folding wing gang beams. These models are also available with solid wing gang beams on rear. Fasten support bracket, arrow 10, to rear right hand gang beam. Fasten with one backing plate and 4 -5/8" x 7½" bolts. Position so that the bracket is located between the 2 bearing hangers on the folding beam, when beam is folded.

Fasten support bracket, arrow 11, to rear left hand corner wing frame. Fasten with one U-bolt. Position so that bracket is located between the 2 bearing hangers on the folding beam, when beam is folded.

NOTE: Support bracket must be located between scrapers when beam is folded. Scraper U-bolt will interfere with support bracket if support bracket is positioned over a scraper.

33. See ILL. 18. VERY IMPORTANT: Loosen all the bolts, arrow 1, which bolt the bearings to the hangers, arrow 2. Then turn the disc blades to allow the bearings to align themselves. Next tighten all the bolts.

This will ensure proper bearing alignment, increasing bearing life.

VERY IMPORTANT
WHEN RAISING WINGS FOR TRANSPORT FOR FIRST TIME AFTER ADJUSTING GANGS, RAISE WINGS SLOWLY MAKING SURE WING GANGS CLEAR CENTRE FRAME GANGS AND CENTRE FRAME.

ILL. 18

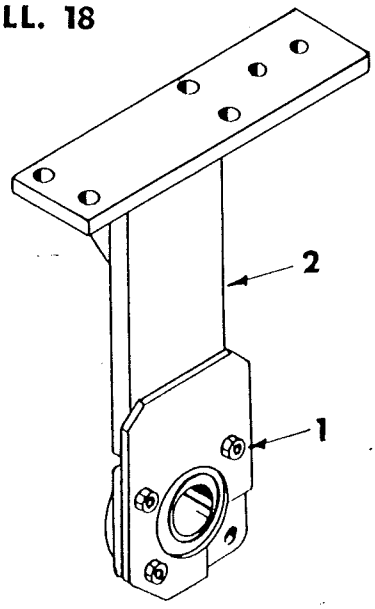

CAUTION: FOR MODEL EQUIPPED WITH FOLDING GANG BEAMS ON WINGS. WHEN FOLDING OR UNFOLDING GANG BEAMS, WATCH YOUR HANDS, AND HANDS OF PERSONS THAT MAY BE STANDING BY. THE HEAVY GANG COULD CAUSE SERIOUS INJURY.

34. See ILL. 19. Adjust scraper bar, arrow 1, and scrapers, arrow 2, of each gang so that each scraper blade is in contact with disc blade.

IMPORTANT: Disc will require less horse power to pull if scrapers are adjusted properly.

ILL. 19

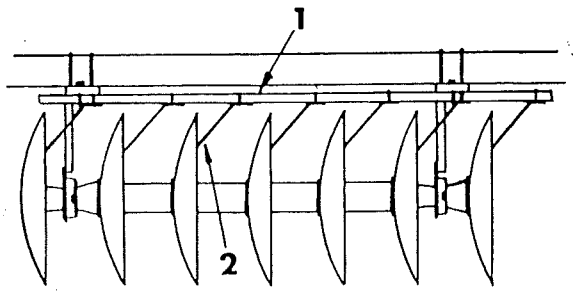

CAUTION: WHEN ATTACHING GANG ASSEMBLIES, WEAR PROTECTIVE GLOVES TO HELP PREVENT INJURY FROM CUTTING EDGES OF BLADES.

ILL. 20 – 28′ Model shown

IMPORTANT: Be sure inside scraper, arrow 9, of each front centre frame gang is placed as close as possible to blade, arrow 10. If scraper or scraper bar extnds too far toward wing gangs, scraper or scraper bar will interfere with wing gang when wings are folded.

IMPORTANT-Be sure excess gang beam of R.H. front main frame gang, arrow 11, does not interfere with leveling crank. Also, be sure excess gang beam does not extend too far into space between main frame gangs, arrow S. If gang beams are too close together, beams could interfere with each other when wing flexes.

IMPORTANT: Front centre frame gang overlap (2½") must not exceed 2½". If gangs are moved in too far, wing gang may interfere with centre frame.

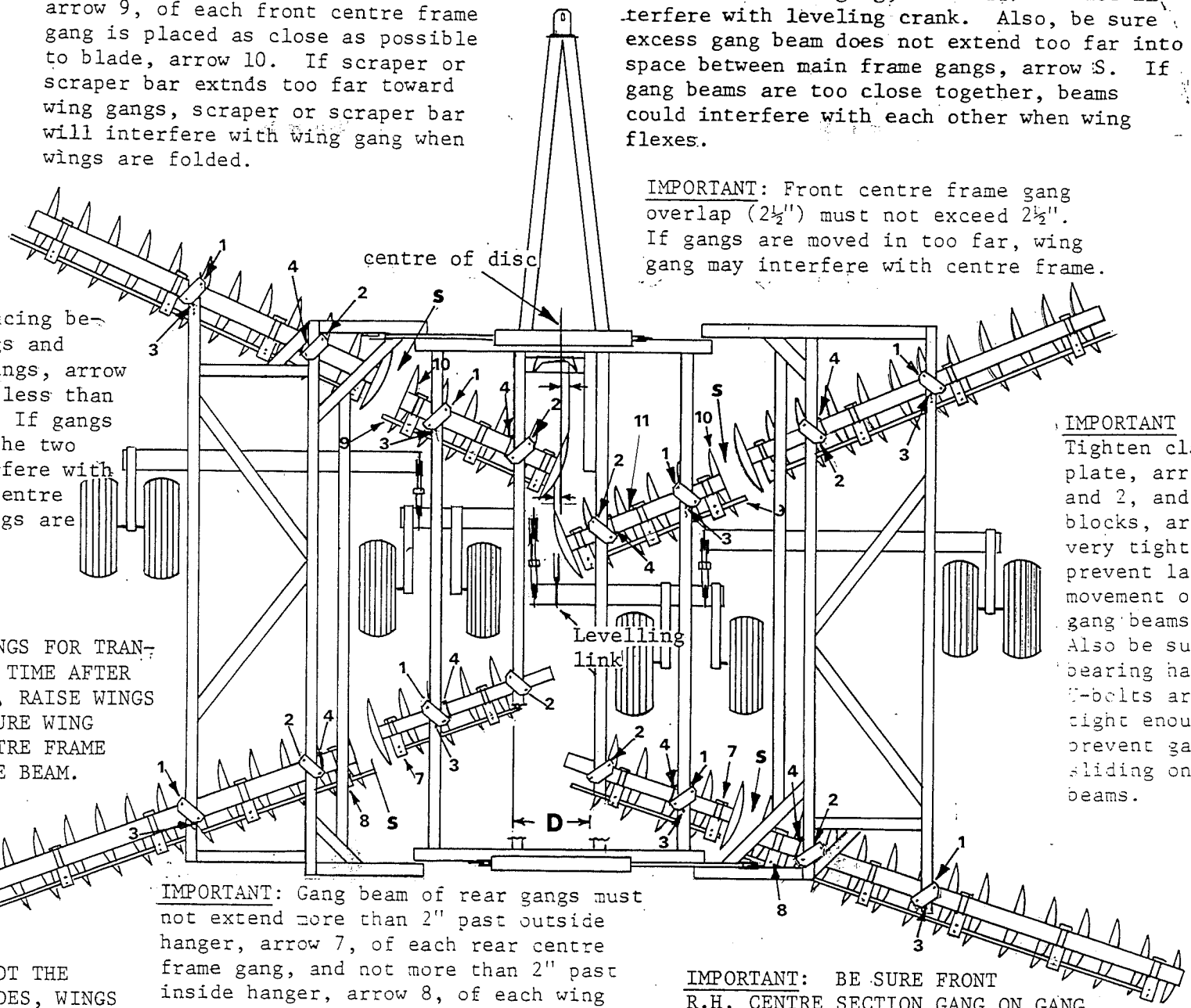

IMPORTANT : Spacing between wing gangs and centre frame gangs, arrow S, MUST NOT be less than blade spacing. If gangs are set close the two gangs may interfere with each other or centre frame, when wings are folded.

IMPORTANT
Tighten clamp plate, arrow 1 and 2, and thrust blocks, arrow 4, very tight to prevent lateral movement of gang beams. Also be sure bearing hanger U-bolts are tight enough to prevent gangs sliding on gang beams.

VERY IMPORTANT:

WHEN RAISING WINGS FOR TRANSPORT FOR FIRST TIME AFTER ADJUSTING GANGS, RAISE WINGS SLOWLY MAKING SURE WING GANGS CLEAR CENTRE FRAME GANGS AND CENTRE BEAM. ALSO MAKE SURE REAR WING GANGS HAVE ENOUGH CLEARANCE TO PASS BY EACH OTHER. IF REAR WING GANG ANGLE IS NOT THE SAME ON BOTH SIDES, WINGS WILL INTERFERE WITH EACH OTHER WHEN WINGS ARE FOLDED.

IMPORTANT: Gang beam of rear gangs must not extend more than 2" past outside hanger, arrow 7, of each rear centre frame gang, and not more than 2" past inside hanger, arrow 8, of each wing frame gang. If gang beam is extended too far, will interfere with each other when wings are folded.

IMPORTANT: BE SURE FRONT R.H. CENTRE SECTION GANG ON GANG BEAM, ARROW 4, DOES NOT INTERFERE WITH LEVELLING CRANK.

ADJUSTMENTS

1. SETTING ANGLE OF FRONT AND REAR GANGS - See ILL. 20

(a) The angle the gangs are set at is determined by the soil conditions. A field with hard soil will require more cutting angle to penetrate soil than a field with soft soil. In soft soil conditions disc will push dirt or ridge at outside if there is too much cutting angle.

IMPORTANT: Excessive gang angle will put added pressure on the gangs and will decrease the life of bearings, blades etc.

When gangs are set at an extreme angle, more horsepower is required to pull disc.

IMPORTANT: When setting gang angle be sure all front gangs are set at same angle. The front centre frame gangs must be set at same angle as front wing frame gangs. The rear centre frame gangs must be set at same angle as rear wing frame gangs. For example: if front centre frame gangs are set in the middle hole, then set front wing frame gangs in the middle hole.

(b) See ILL. 20. Each gang has 3 holes in outside beam of each frame to set cutting angle. To set each gang, loosen clamp plate, arrow 1 & 2, and select hole which will give desired cutting angle. Then adjust gang so clamp plate, arrow 1, is positioned ahead of the selected hole. Insert pin, arrow 3, in selected hole and secure pin with cotter pin. to start with, it is recommended to set cutting angle at centre hole.

2. LATERAL ADJUSTMENT OF THE FRONT AND REAR GANGS

(a) FRONT GANGS - See ILL. 20. Each time the angle of the front gangs are adjusted the following adjustments must be made. Loosen thrust block, arrow 4, and adjust front gangs so that leading edge of inside blades are approximately 2½" past centre of disc. The centre of disc is shown in ILL. 20. If the above adjustment is made correctly the front gang will not leave any unbroken ground or ridge at centre of disc.

(b) REAR GANGS - See ILL. 20. The opening between the rear gang dimensions "D" must be set at a distance that will allow furrow left by the front gangs to be filled evenly. The distance the rear gangs are set apart is determined by the discing speed, discing depth, gang angle and soil conditions. If the rear gangs are set too close together, the rear gangs will leave a ridge at centre. If rear gangs are set too far apart, the furrow at centre left by the front gangs will not be filled.
Take note of the amount of soil rear inside blades are picking up. It may be necessary to increase distance between rear gangs in order to collect enough soil to fill furrow.

If gang angle is increased for deeper discing depth, the rear gangs usually must be widened. If gang angle is decreased for a shallower discing depth, the rear gangs usually must be set closer together.

An increase in discing speed may require rear gangs to be set further apart. A decrease in discing speed may require rear gangs to be set closer together.

NOTE: Be sure space between individual gangs is adjusted to proper blade spacing.

(c) IMPORTANT - See ILL. 20. When gang adjustments are complete, tighten all gang beam clamp plates, arrow 1 & 2. Clamp plate bolts must be very tight to prevent lateral movement of gangs. Make sure the 1-½" bolts are tight against the disc frame as shown in ILL. 12 & 14

(c) IMPORTANT - cont'd.

Then place the 8 thrust blocks, arrow 4, tight against the frame and tighten U-bolt. The thrust blocks, arrow 4, must be tight against the frame. Thrust block U-bolt must be very tight to help prevent lateral movement of gang beams.

3. VERY IMPORTANT- WHEN RAISING WINGS FOR TRANSPORT FOR FIRST TIME AFTER ADJUSTING GANGS, RAISE WINGS SLOWLY MAKING SURE WING GANGS CLEAR CENTRE FRAME GANGS AND CENTRE BEAM. ALSO MAKE SURE REAR WING GANGS HAVE ENOUGH CLEARANCE TO PASS EACH OTHER. IF REAR WING GANG ANGLE IS NOT THE SAME ON BOTH SIDE, GANGS WILL INTERFERE WITH EACH OTHER WHEN WINGS ARE FOLDED.

4. LEVELLING DISC - See Ill. 21. When discing the front and rear gangs should be cutting at the same depth. The levelling crank, arrow 3, is used to level the disc. Before adjusting levelling crank, install the required cylinder depth control segments, arrow 4, on the rock-shaft cylinder shaft, to obtain the desired discing depth. The segments vary in length from 1" to 4-1/4".

ILL. 21

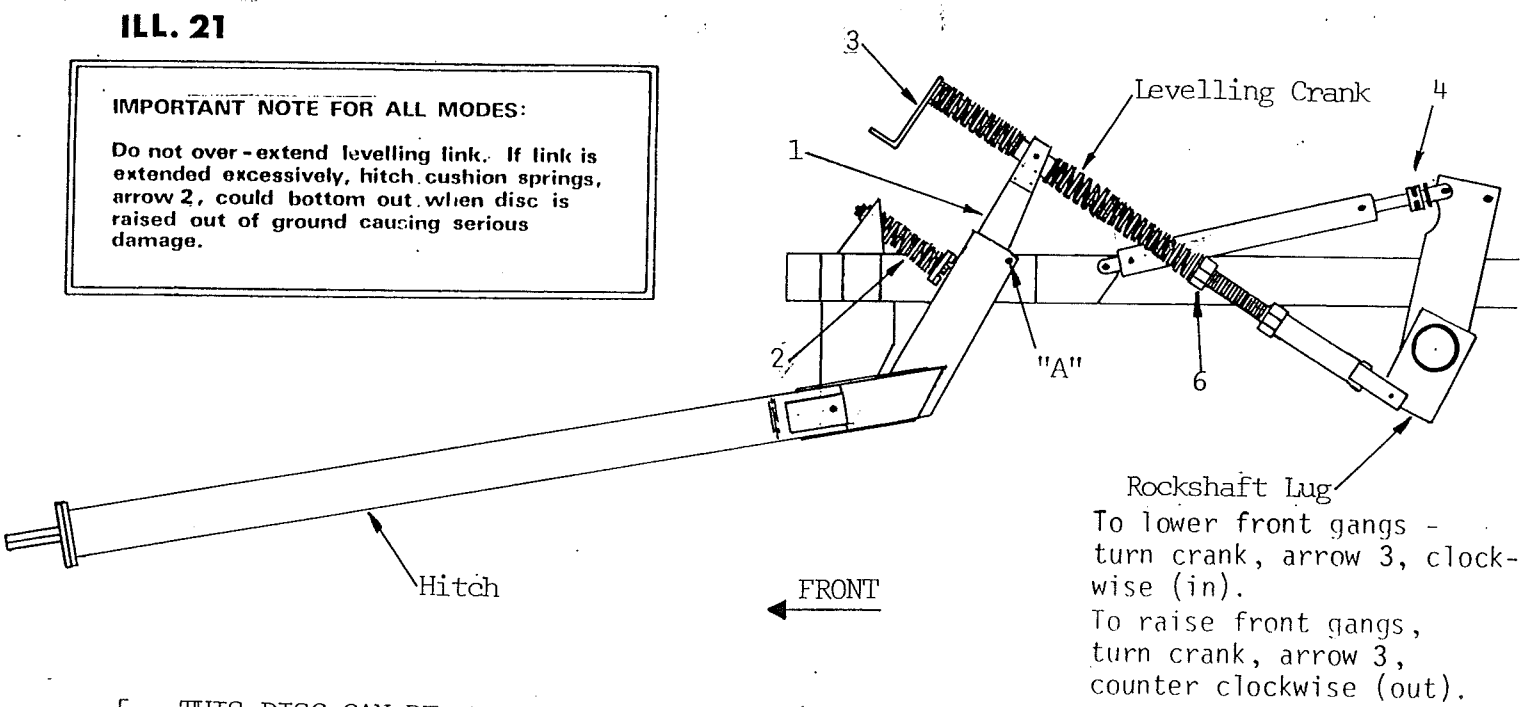

5. THIS DISC CAN BE OPERATED IN THE FOLLOWING 2 DIFFERENT HITCH MODES - SEE ILL. 21.

MODE 1. Leave hitch levelling arm, arrow 1, unlocked, no pin installed in hole "A". This mode gives more disc flexibilty, increasing disc's ability to follow land contour, reducing required H.P. and fuel.

Mode 1 allows gangs to roll over obstructions, reducing possibility of damage to blades and bearings, also reduces gangs pushing dirt in certain conditions.

MODE 11. Lock hitch levelling arm, arrow 1, by installing pin (not supplied) in hole "A".

Use this mode only in special circumstances where more weight must be transferred to front gang for increased penetration.

Mode 11 is not recommended for ordinary discing.

⚠ CAUTION: DO NOT EXCEED 10 M.P.H. WHEN TRANSPORTING DISC ON SMOOTH ROADS. REDUCE SPEED WHEN TRANSPORTING ON ROUGH ROADS. EXCESSIVE SPEED COULD CAUSE LOSS OF TRACTOR CONTROL AND DAMAGE TO DISC AND TRACTOR. DO NOT TRANSPORT DISC WITH ANY OTHER VEHICLE EXCEPT TRACTOR.

⚠ CAUTION: ALWAYS PLACE TRACTOR CONTROLS IN NEUTRAL AND LOCK BRAKES WHEN HITCHING DISC TO TRACTOR, TRACTOR COULD ROLL BACKWARDS WHEN HITCHING DISC.

⚠ CAUTION: WHEN OPERATING ON HILLSIDES USE EXTRA CARE. TRACTOR MAY TIP SIDEWAYS IF IT STRIKES HOLE, DITCH OR OTHER IREEGULARITY.

⚠ CAUTION: WHEN TRAILING THE DISC OVER PUBLIC ROADS, USE THE SMV EMBLEM AND WARNING LIGHTS FOR PROTECTION OF TRACTOR AND OTHER MOTOR VEHICLE OPERATORS.

CHECK LOCAL LAWS FOR WIDTH AND WEIGHT MAXIMUMS

GENERAL OPERATING INSTRUCTIONS

1. Before operating disc, refer to safety precautions outlined on backside of front cover page. Review all safety items applicable to road transport and field operation of disc.

2. IMPORTANT: When lowering wing to field position, be sure wing lift cylinders are fully extended. After wing tires have hit the ground, continue to hold hydraulic lever. There will be a short pause before cylinders fully extend. If cylinders are not fully extended the wing will hang on cylinders and will not flex.

3. Do not make sharp turns with the disc in ground. Sharp turns put excess pressure on the gangs.

   IT IS ADVISABLE TO ALWAYS LIFT MACHINE OUT OF GROUND FOR MAKING SHARP TURNS. EXCESSIVE SIDE THRUST IS APPLIED TO BEARINGS AND MACHINE IF DISC IS TURNED WHILE IT IS IN THE GROUND.

4. For best performance the tractor drawbar should be pinned at centre of tractor.

5. When transporting disc be sure to fasten lock-up strap to rockshaft, to place disc in lock-up position.

6. IMPORTANT: When transporting disc, DO NOT exceed speed of 10 M.P.H.

7. IMPORTANT: DO NOT DISC WITH WINGS IN UP POSITION. SERIOUS DAMAGE WILL OCCUR.

8. IMPORTANT: For models equipped with folding gang beams on wings, be sure that beams are folded when transporting disc, to give minimum transporting height. Be sure folding beams are locked in support brackets with pin before folding wings.

9. IMPORTANT: Do not operate disc with front gangs cutting deeper than rear gangs. Disc must be level, if front gangs are lower, excessive strain will be placed on blades, gang bearings, frame and hitch, which could lead to premature parts failure, especially outside blades of front gangs.

10. IMPORTANT - When disc is parked with blades resting on frozen ground, do not attempt to lift disc out of frozen ground by lowering transport wheels. Lifting disc out of frozen ground with transport wheels may cause serious damage to disc components. Damage will most likely occur to main lift cylinder and rockshaft cylinder arm.

11. DO NOT PARK DISC WITH BLADES ON GROUND THAT MAY FREEZE. LEAVE DISC PARKED ON TRANSPORT WHEELS.

    IMPORTANT:
    To avoid serious damage to hitch jack, be sure jack is locked in horizontal position and crank of jack is not hanging below hitch when disc is in motion See page 5, section 12.

12. IMPORTANT: DO NOT OPERATE DISC IN FIELD WITH WING FOLDED IN TRANSPORT POSITION. SEVERE DAMAGE WILL OCCUR WHEN DISCING WITH WING FOLDED.

13. IMPORTANT: BEFORE DISCONNECTING HYDRAULIC HOSES FROM TRACTOR, RELEASE PRESSURE IN HYDRAULIC CYLINDERS. SERIOUS DAMAGE COULD OCCUR TO HYDRAULIC CYLINDER IF OIL EXPANSION TAKES PLACE DUE TO WARM WEATHER OR IF DISC IS STORED IN HEATED BUILDING.

14 FOLDING TYPE WING GANG BEAMS WITH OVER CENTRE LOCK

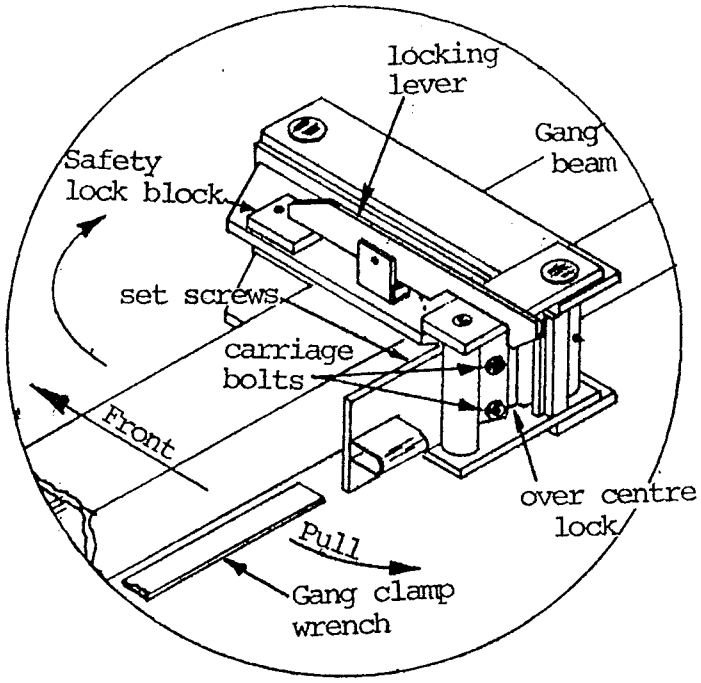

Detail shows gang beam in locked position, to unlock rotate safety lock block so locking lever is positioned out of the way. Using gang clamp wrench unlock beam by pivoting over centre lock. Over centre lock can be lengthened or shortened as required. Loosen carriage bolts and adjust set screws.

CAUTION: DO NOT raise wings into transport position with folding gangs in working position (not folded). Folding gang beam will fall rapidly if not properly locked, causing serious injury to persons near by, and also serios damage to disc. (Folding beams must be folded and locked into support bracket where wings are raised into transport position).

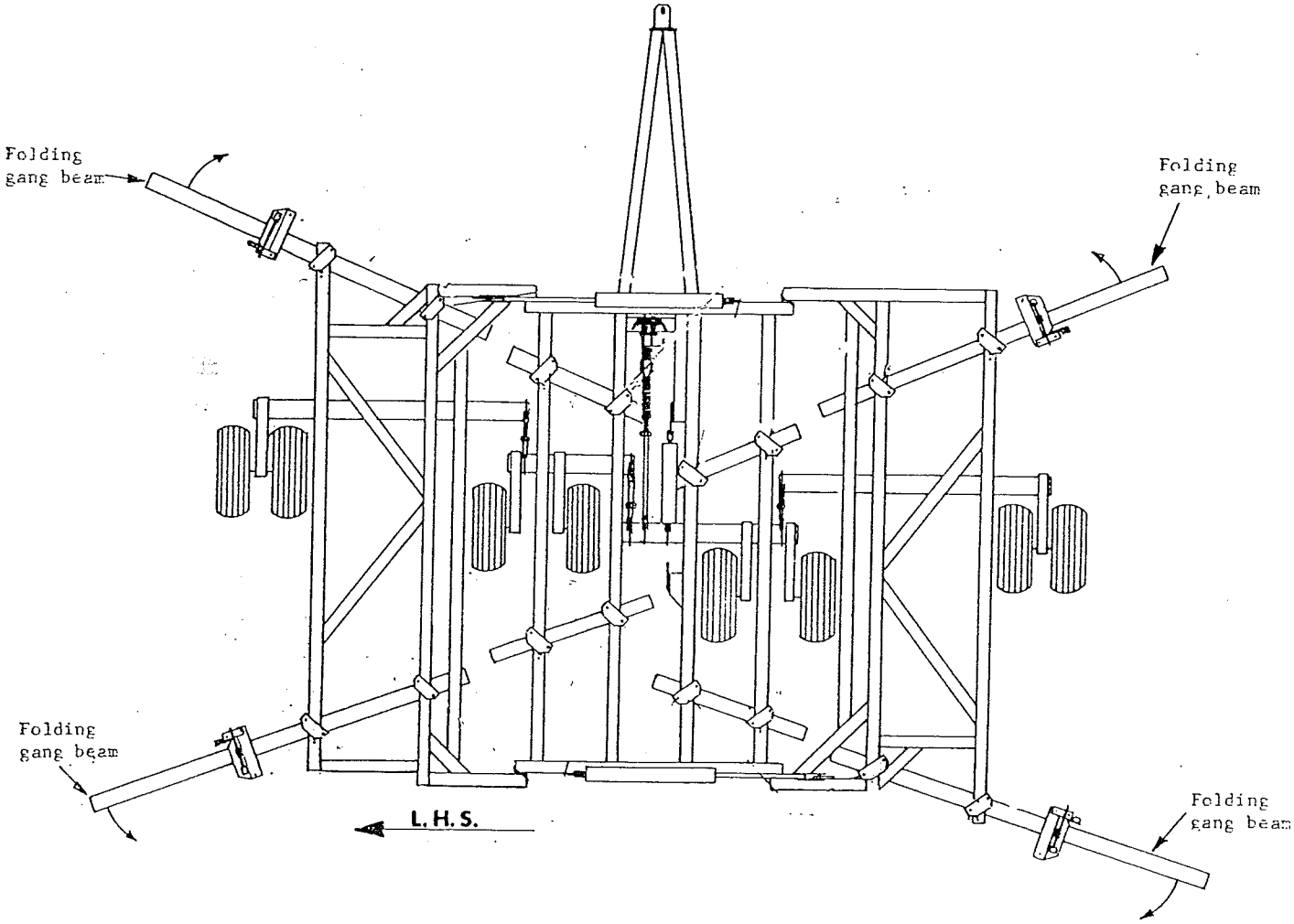

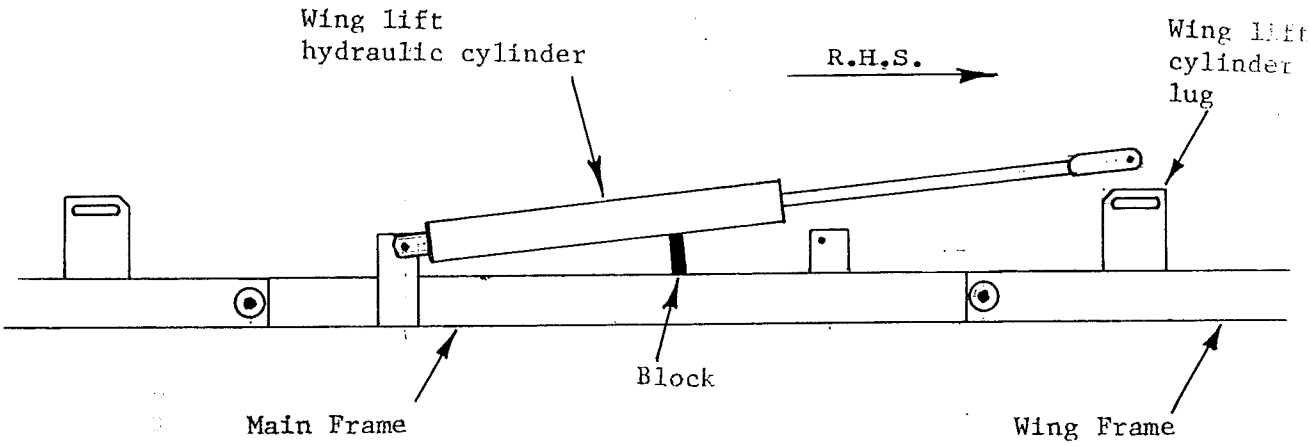

15. PINNING SHAFT END OF WING LIFT CYLINDERS

IMPORTANT:

If wing lift cylinders are unpinned at shaft end and retracted to allow more wing flexibility, or when cylinder is attached during initial assembly, extra care must be used when attaching shaft end of cylinder.

To attach shaft end of cylinder , block up cylinder as shown in ILL. above. This will allow cylinder shafts to pass over cylinder lug when cylinder is being extended.

If cylinder is not blocked up, the end of cylinder shaft may STRIKE cylinder lug, causing serious damage to cylinders

ILL. A

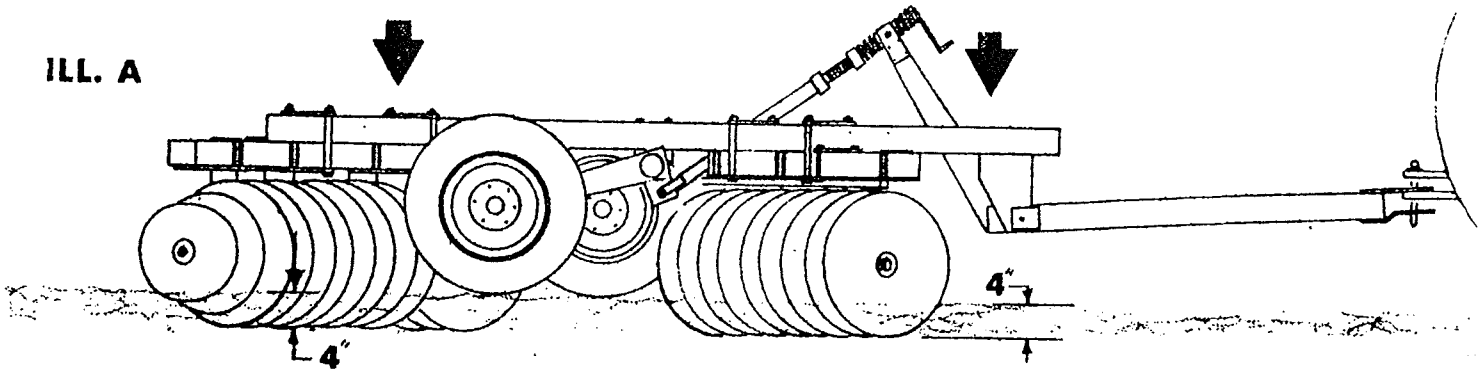

CORRECT - **WHEELS ON GROUND GAUGING DISCING DEPTH**

ILL. B

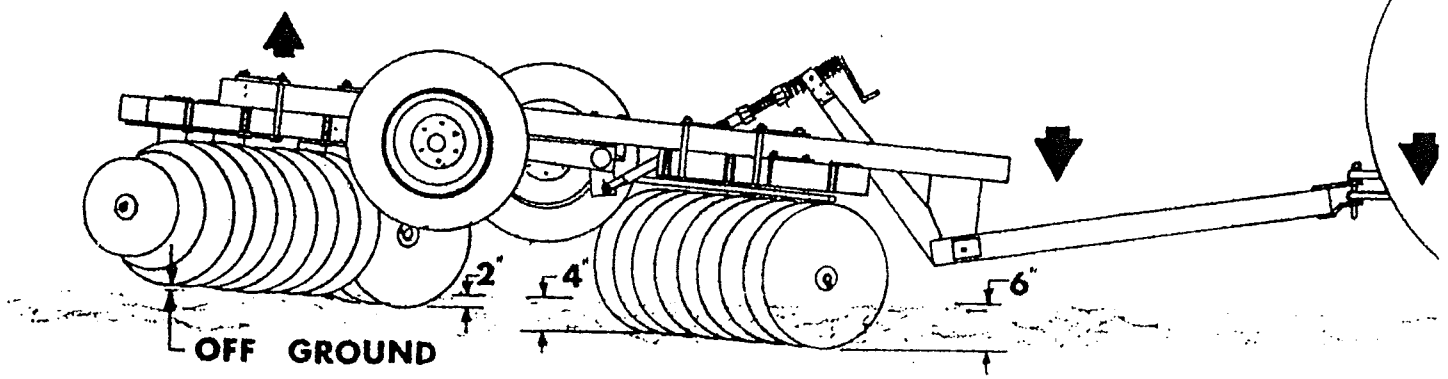

INCORRECT - **WHEELS RAISED OFF GROUND**

- GENERAL OPERATING INSTRUCTIONS CONT'D.

IMPORTANT

16. To keep disc level, transport wheels must be riding on ground, gauging desired discing depth, as shown in ILL. A

If conditions are such that disc can not penetrate to maximum depth, do not raise transport wheels off ground as shown in ILL. B . Raised transport wheels will cause front of disc to drop causing front gangs to cut deeper than rear gangs.

With front of disc lower than the rear, the front outside blades will cut much deeper than the front inside blades. This means most of the disc's weight is placed on the front outside blade, forcing them deep into the ground.

Uneven and deep front gang penetration in tough conditions will place excessive strain on blades, gang bearings, frame and hitch will probably lead to a premature failure of parts, especially outside blade of front gangs.

IMPORTANT: Operating disc with transport wheels off ground will cause uneven discing job, and place undue strain on machine, which could lead to parts failure. Always operate disc with tranport wheels on ground even if conditions will not allow disc to penetrate to maximum depth.

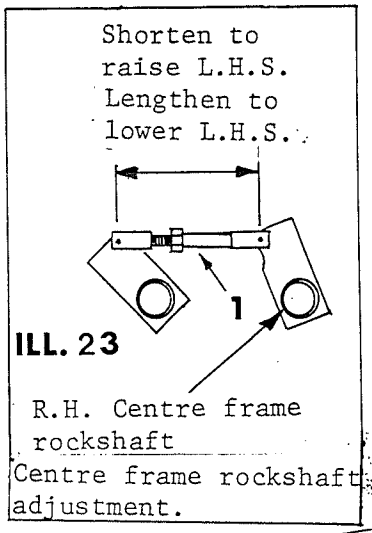

ILL. 22 32′ Model shown

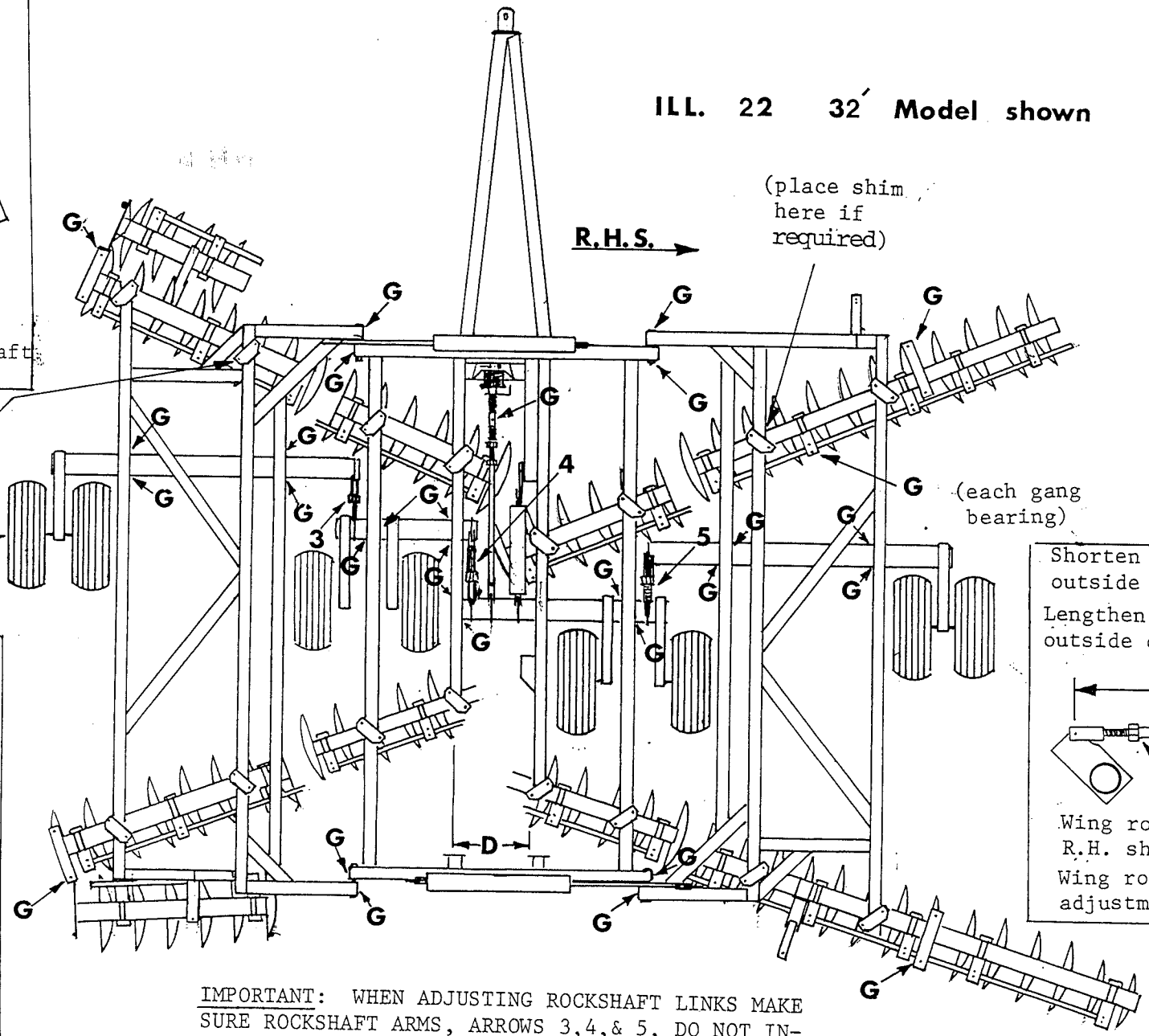

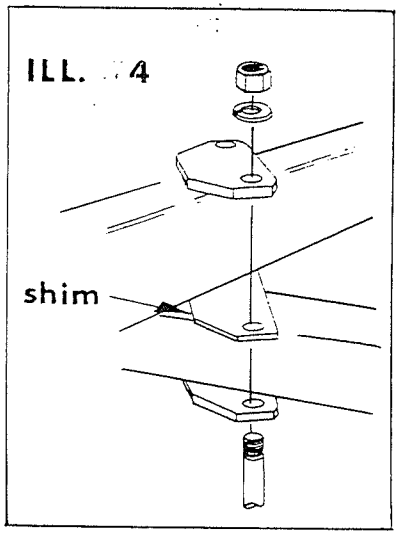

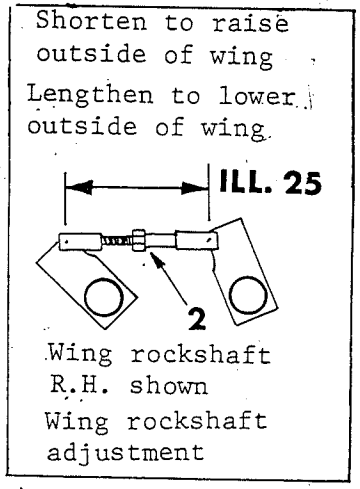

IMPORTANT: WHEN ADJUSTING ROCKSHAFT LINKS MAKE SURE ROCKSHAFT ARMS, ARROWS 3,4,& 5, DO NOT INTERFERE WITH FRONT GANGS.

MAINTENANCE

1. LUBRICATION - All lubricating points on disc are marked with arrow G in ILL. 22.

   (a) Gang bearings may be lubricated every 4 hours with a minimum amount of grease. Use a high quality SAE multi-purpose grease. CAUTION: If gang bearings are over lubricted there is a possibility that seals can be pushed out. This is more likely to happen when bearings are new. (For 211 or 214,410 series bearings only) If disc is equipped with T2-215 series bearings, lubricate as above. Excess lubrication will not damage seals.

   (b) Lubricate wing pivot points and levelling crank when necessary. If disc is equipped with folding gangs, lubricate hinge points when necessary.

   (c) Lubricate the wheels once a day.

   (d) Lubricate top and bottom half of each rockshaft bearing once a day.

   NOTE: When you receive your new disc, grease all lubricating points before starting to disc.

2. All bolts and nuts should be checked periodically to make sure they are tight. Special attention should be given to gang bolts, bearing bolts and bearing hanger U-bolts. If gang bolts come loose, they must be tightened to 3200 ft. lbs.

   IMPORTANT: Severe damage will occur if gang bolts are loose.

3. When storing disc for a long period of time, grease all lubricating points.

4. Keep the pressure equal on all wheels. The amount of the pressure will depend on weight of disc and field conditions.

CAUTION: NEVER ALLOW ANYONE TO RIDE ON DRAWBAR OR TRACTOR OR ON THE DISC. THE PERSON RIDING MAY FALL AND BE SERIOUSLY INJURED.

CAUTION: DO NOT SERVICE DISC WHILE IT IS IN MOTION. YOU MAY FALL IN FRONT OF DISC AND BE SERIOUSLY INJURED.

CAUTION: LOWER DISC COMPLETELY TO GROUND WHEN SERVICING. IF DISC MUST BE SERVICED IN RAISED POSITION, LOCK ROCKSHAFT BY ENGAGING LOCK-UP STRAP. IF ANY COMPONENTS SHOULD FAIL, OR IF HYDRAULIC LEVER SHOULD BE ACCIDENTLY OPERATED, DISC COULD DROP.

CAUTION: DO NOT STAND UNDER WINGS WHILE WING IS BEING RAISED OR LOWERED. IF ANY COMPONENT OF HYDRAULIC SYSTEM FAILED, WING COULD FALL.

CAUTION. WHEN TRANSPORTING DISC, ALWAYS LOCK ROCKSHAFT. IF ANY COMPONENT OF HYDRAULIC SYSTEM FAILED, DISC COULD FALL.

CAUTION: WHEN TRANSPORTING DISC WITH WINGS RAISED, BE SURE THERE IS SUFFICIENT CLEARANCE UNDER ALL POWER LINES AND OTHER OVERHEAD OBSTRUCTIONS. MODELS EQUIPPED WITH FOLDING GANG BEAMS MUST HAVE THESE BEAMS FOLDED TO GIVE MINIMUM TRANSPORT HEIGHT.

TROUBLE SHOOTING

1. If outside blade of front wing gangs are cutting too deep, causing disc to ridge at outside, the following adjustments can be made:

   (a) Check if transport wheels are on ground, gauging discing depth. If wheels are raised off ground, front end of disc will drop causing disc to ridge. See Section 13 of GENERAL OPERATING INSTRUCTIONS.

   (b) Check tire pressure of wing tires. If the pressure in wing tires is low, the outside of wing will be lower than the centre of disc causing disc to ridge at outside.

   (c) Using the levelling crank, raise front of disc.

   (d) Raise outside of wing frame by adjusting rockshaft link. See Ill. 25.

   (e) If above adjustments do not cure problem, place shims between front gang beams and wing frame. Locate shim on the inside clamp. This will lower the inside end of gang and raise the outside end. See Ill. 22 and 24.

2. If one side of centre section is cutting deeper than the other, the following adjustments can be made:

   (a) Check if tire pressure is even on all 4 centre section tires.

   (b) See Ill. 23. Adjust link, arrow 1, between L.H. and R.H. centre section rockshaft to level centre frame.

3. If disc is not penetrating soil, the following adjustments can be made:

   (a) Increase gang angle. See ADJUSTMENTS.

4. If disc is pushing dirt and leaving a ridge at the outside, the following adjustments can be made:

   (a) Level disc with levelling crank.

   (b) Reduce cutting angle of front and rear gangs. See ADJUSTMENTS.

5. If disc is leaving a ridge at centre of disc - check if rear gangs are cutting deeper than front gangs. If so, level disc. If levelling disc does not solve problem, reduce discing speed or reduce rear gang angle if a reduced angle will give adequate penetration, or increase distance between rear gangs. See Section 2 of ADJUSTMENTS.

6. If disc is not filling furrow at centre - check if front gangs are cutting deeper than rear gangs. If so, level disc. If levelling disc does not solve problem, increase discing speed or decrease disctance between rear gangs. See Section 2 of ADJUSTMENTS.

7. If front gangs are leaving unbroken ground (ridge) at centre of disc - the front gangs are either overlapped too much or not enough. See Section 2 of ADJUSTMENTS.

8. If disc side drafts - gang may be angled improperly. The right hand gang must be set at the same angle as left hand gangs.

9. If disc gangs are plugging, the following adjustments can be made:

   (a) Adjust scrapers so that they are in full contact with disc blades.

   (b) Reduce gang angle. See ADJUSTMENTS.

10. See Ill. 25. If outside blades on wings are cutting too deep, or they are not cutting deep enough, adjust rockshaft link, arrow 2. If outside wing blades are cutting too deep, shorten link. This will raise outside of wing frame. If outside wing blades are not cutting deep enough, lengthen rockshaft link. This will lower outside of wing frame.

IMPORTANT: See Ill. 22, 23 and 25. When adjusting rockshaft links, arrow 3, 4 and 5, make sure rockshaft doesn't interfere with front gangs when wheels are raised for maximum discing depth.

11. See Ill. 26. If one side of centre section is cutting deeper than the other, the following adjustments can be made,

   (a) Check if tire pressure is even on all 4 centre section tires.

   (b) Adjust link between L.H. and R.H. centre section rockshaft to level centre frame

ILL. 26

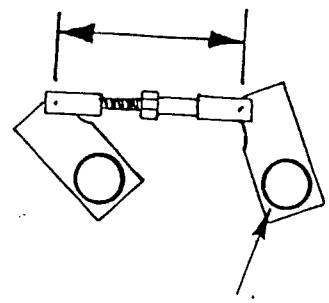

GANG BEAM CHART

9" SPACING

DISC	L.H. & R.H. FRONT CENTRE FRAME BEAM	L.H. & R.H. REAR CENTRE FRAME BEAM	L.H. & R.H. FRONT WING FRAME BEAM	L.H. & R.H. REAR WING FRAME BEAM
66B	56"	50"	77"	106"
70B	56"	50"	83"	110"
78B	56"	50"	106"	130"
78BW (folding wing beam on rear)	56"	50"	106"	79" + 58"
86B	56"	50"	124"	152"
86BW (folding wing beams on front and rear)	56"	50"	79" + 44"	88" + 62"

10½" SPACING

DISC	L.H. & R.H. FRONT CENTRE FRAME BEAM	L.H. & R.H. REAR CENTRE FRAME BEAM	L.H. & R.H. FRONT WING FRAME BEAM	L.H. & R.H. REAR WING FRAME BEAM
58B	56"	56"	77"	98"
62B	56"	56"	92"	110"
66B	56"	56"	98"	118"
66BW (folding wing beam on rear)	56"	56"	98"	79" + 44"
74B	56"	56"	124"	140"
74BW (folding wing beams on front and rear)	56"	56"	79" + 44"	79" + 58"

12" SPACING

DISC	L.H. & R.H. FRONT CENTRE FRAME BEAM	L.H. & R.H. REAR CENTRE FRAME BEAM	L.H. & R.H. FRONT WING FRAME BEAM	L.H. & R.H. REAR WING FRAME BEAM
54B	62"	50"	77"	110"
58B	62"	50"	92"	124"
58BW (folding wing beam on rear)	62"	50"	92"	79" + 44"
66B	62"	50"	110"	152"
66BW (folding wing beams on front and rear)	62"	50"	79" + 38"	79" + 69"

Model 3600

Disc Gang Pattern - 9" Spacing

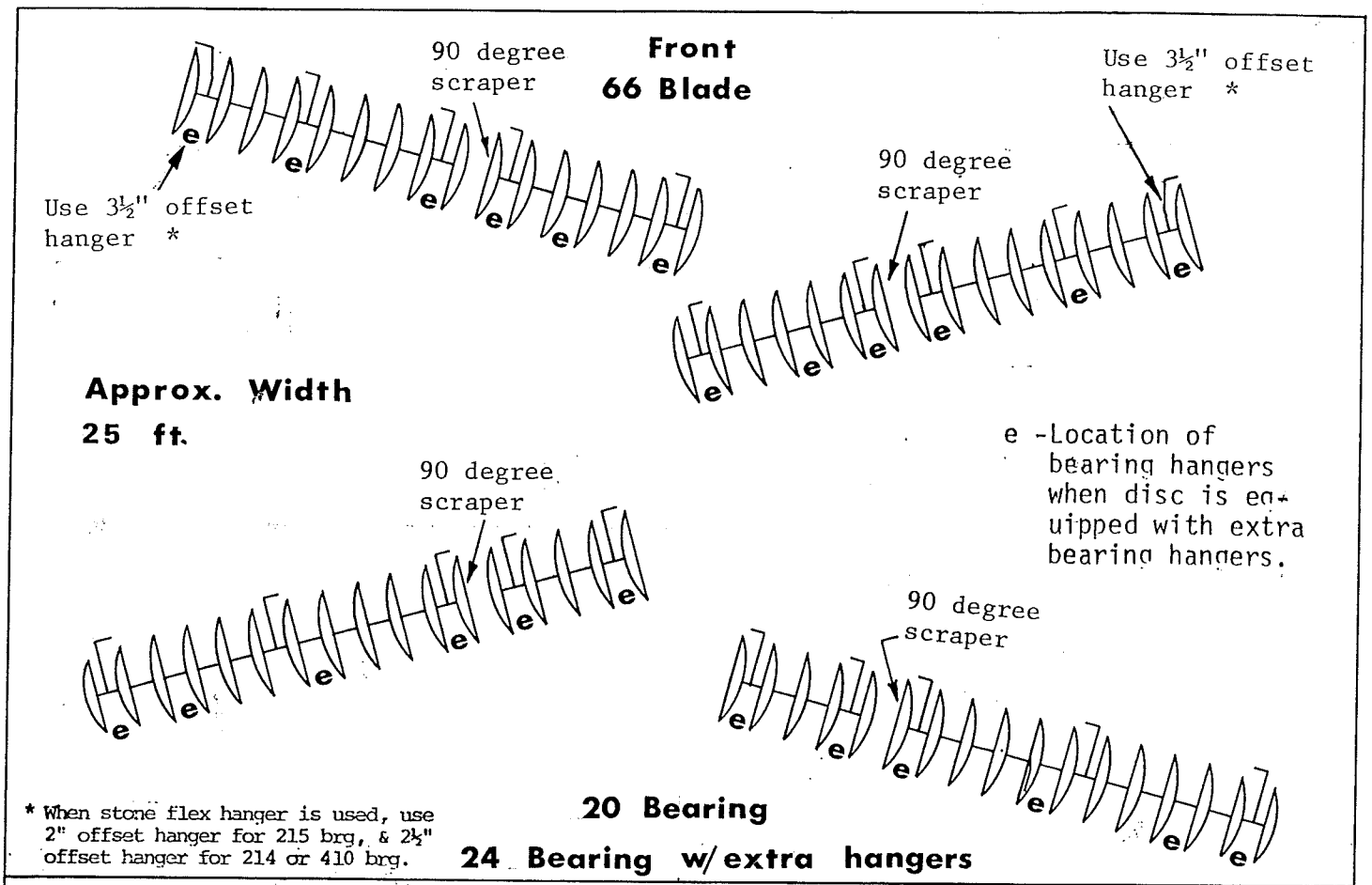

* When stone flex hanger is used, use 2" offset hanger for 215 brg, & 2½" offset hanger for 214 or 410 brg.

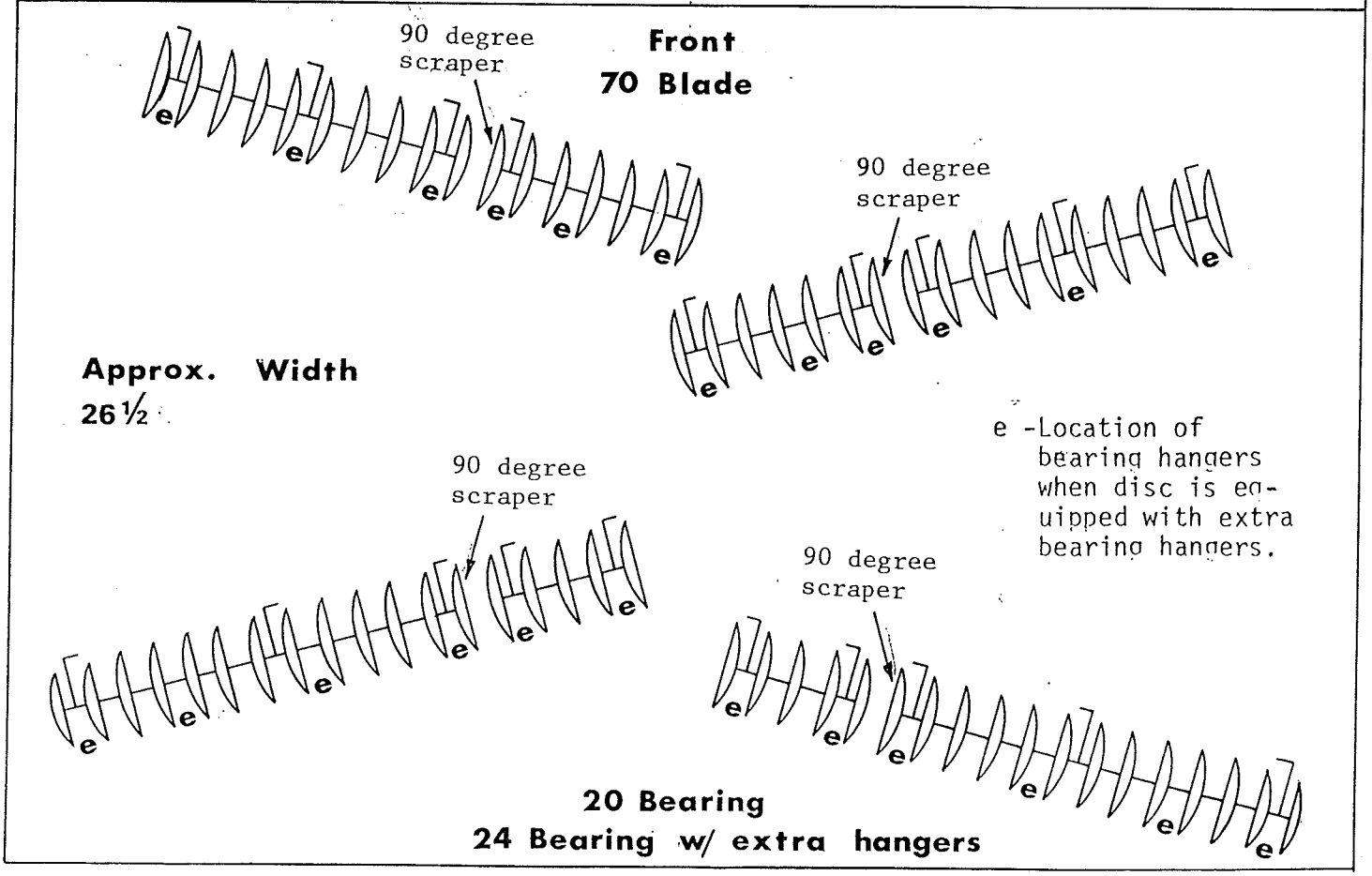

Model 3600

Disc Gang Pattern- 9" Spacing

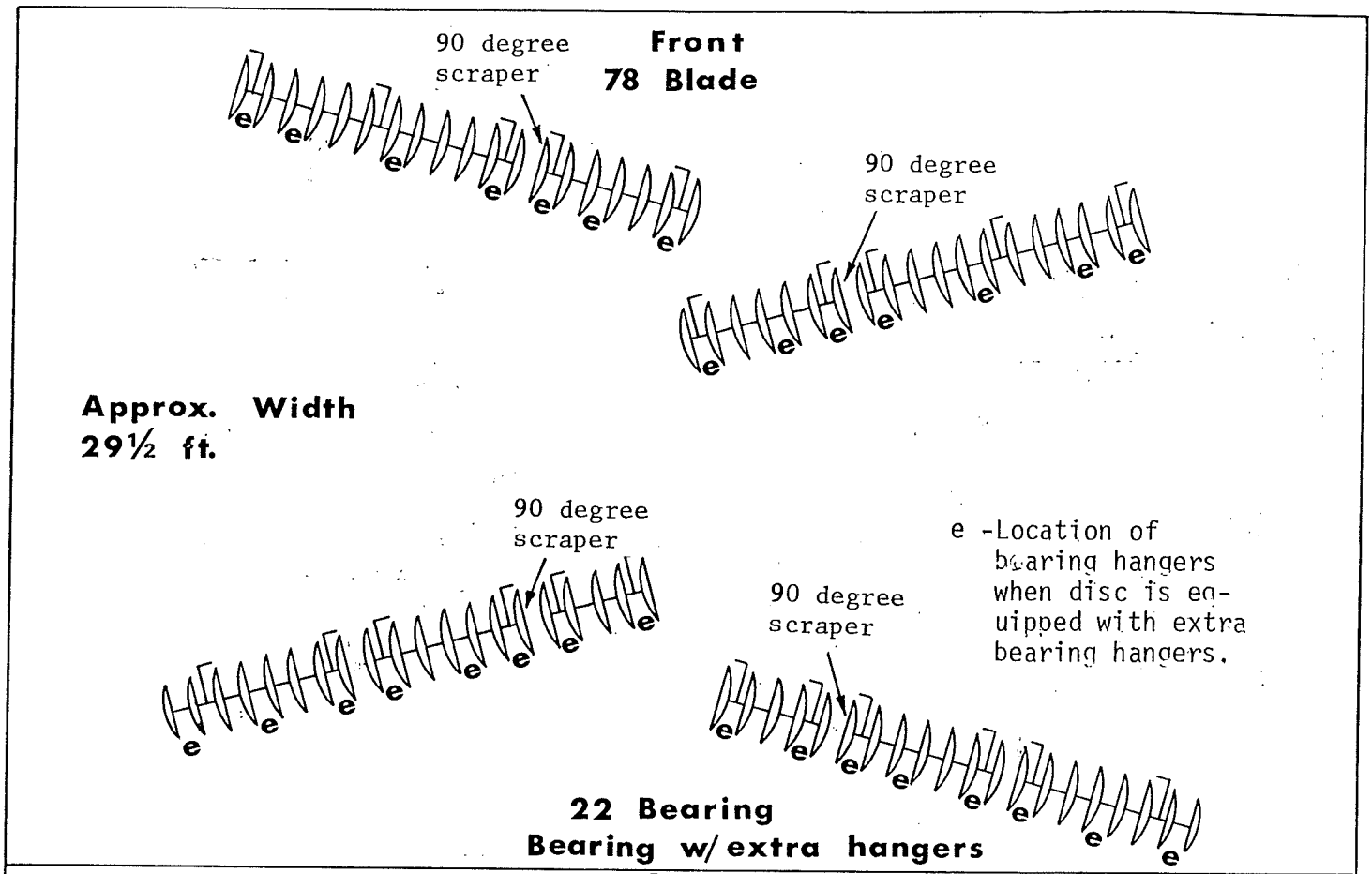

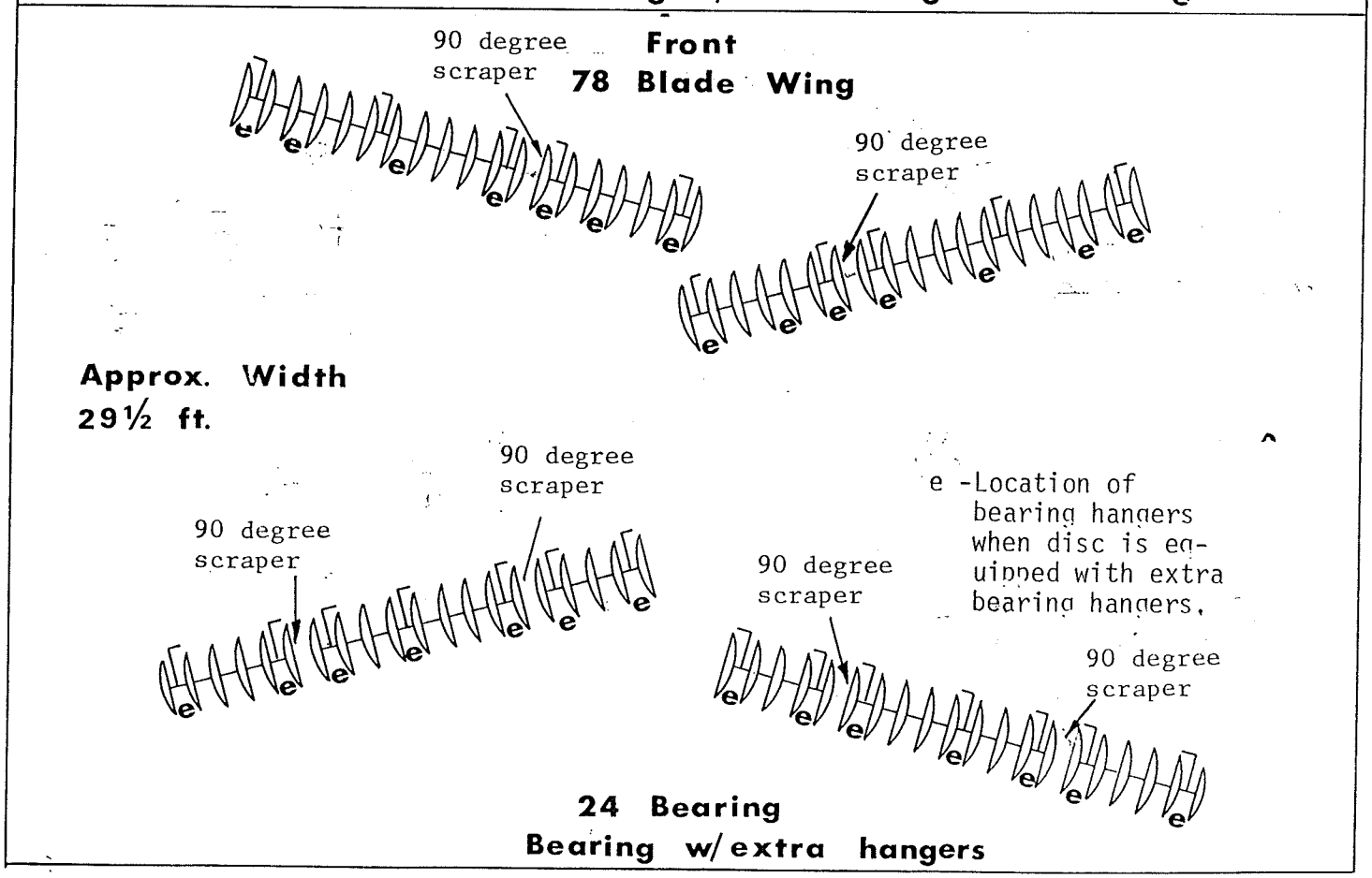

Model 3600

Disc Gang Pattern - 9" Spacing

Front
86 Blade

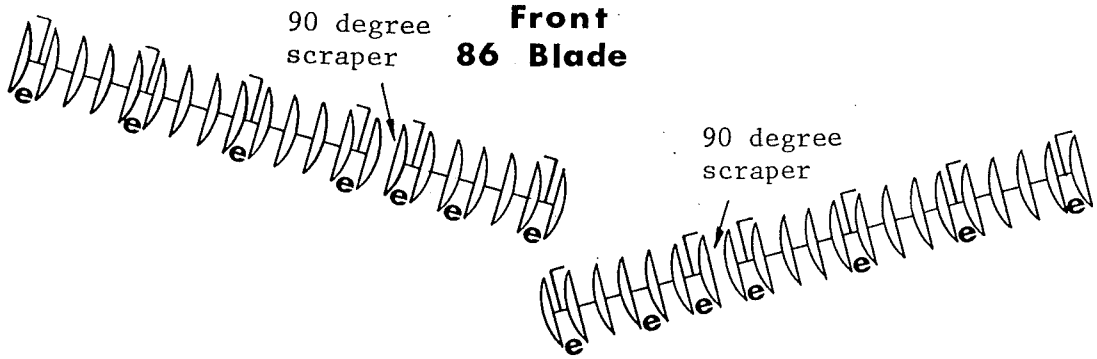

Approx. Width
32½ ft.

e -Location of bearing hangers when disc is equipped with extra bearing hangers.

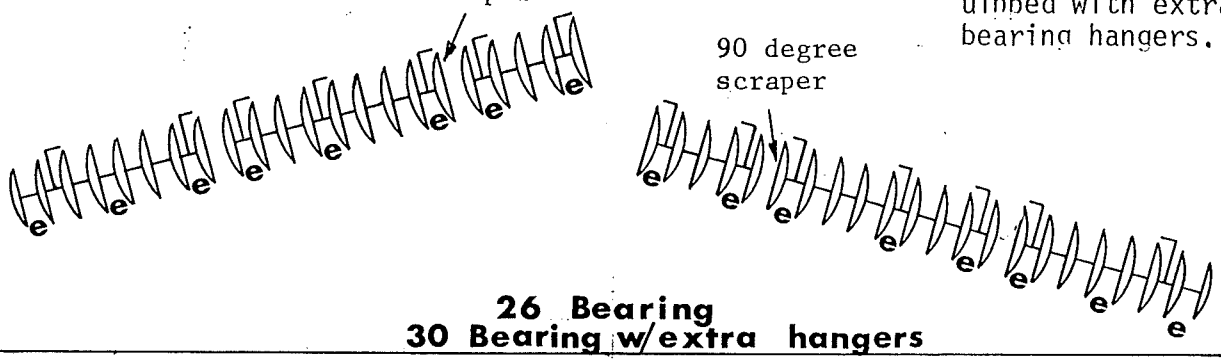

26 Bearing
30 Bearing w/extra hangers

Front
86 Blade Wing

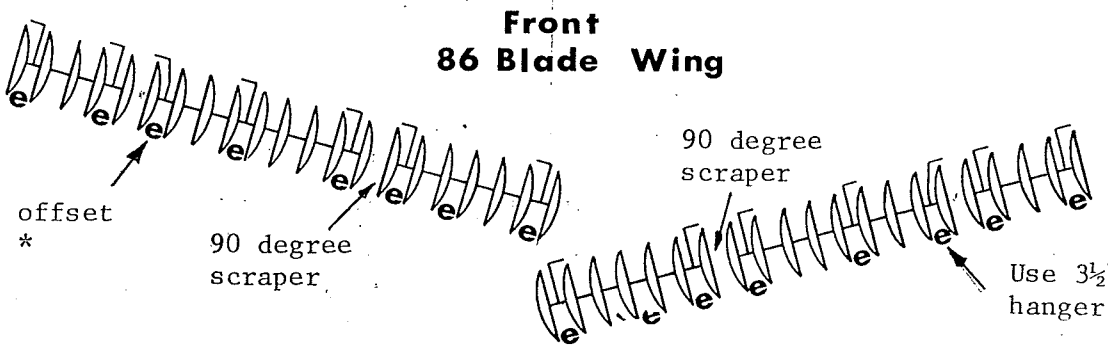

Approx. Width
32½ ft.

e -Location of bearing hangers when disc is equipped with extra bearing hangers.

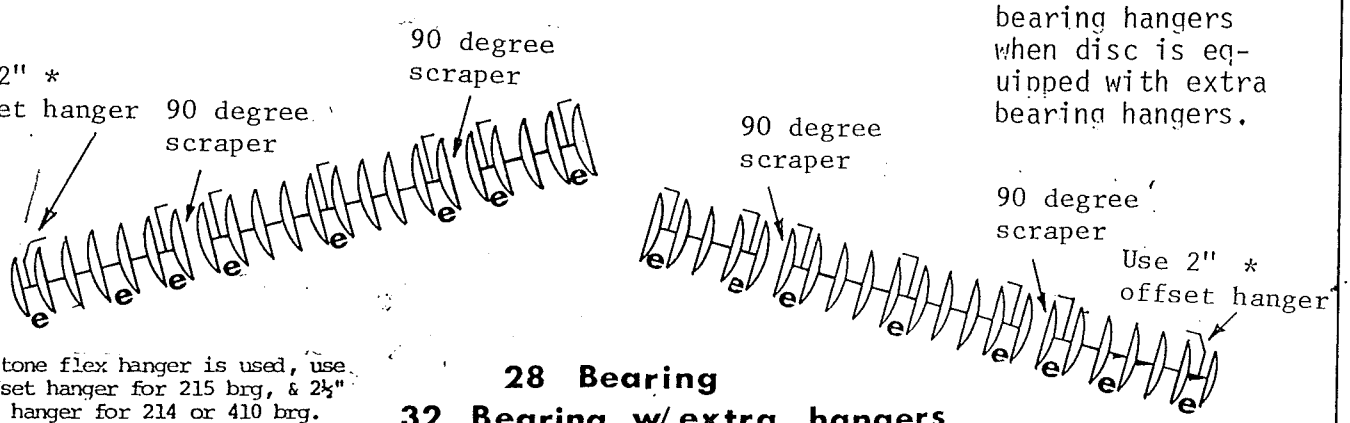

* When stone flex hanger is used, use 2" offset hanger for 215 brg, & 2½" offset hanger for 214 or 410 brg.

28 Bearing
32 Bearing w/extra hangers

Model 3600

Disc Gang Pattern- 10½ Spacing

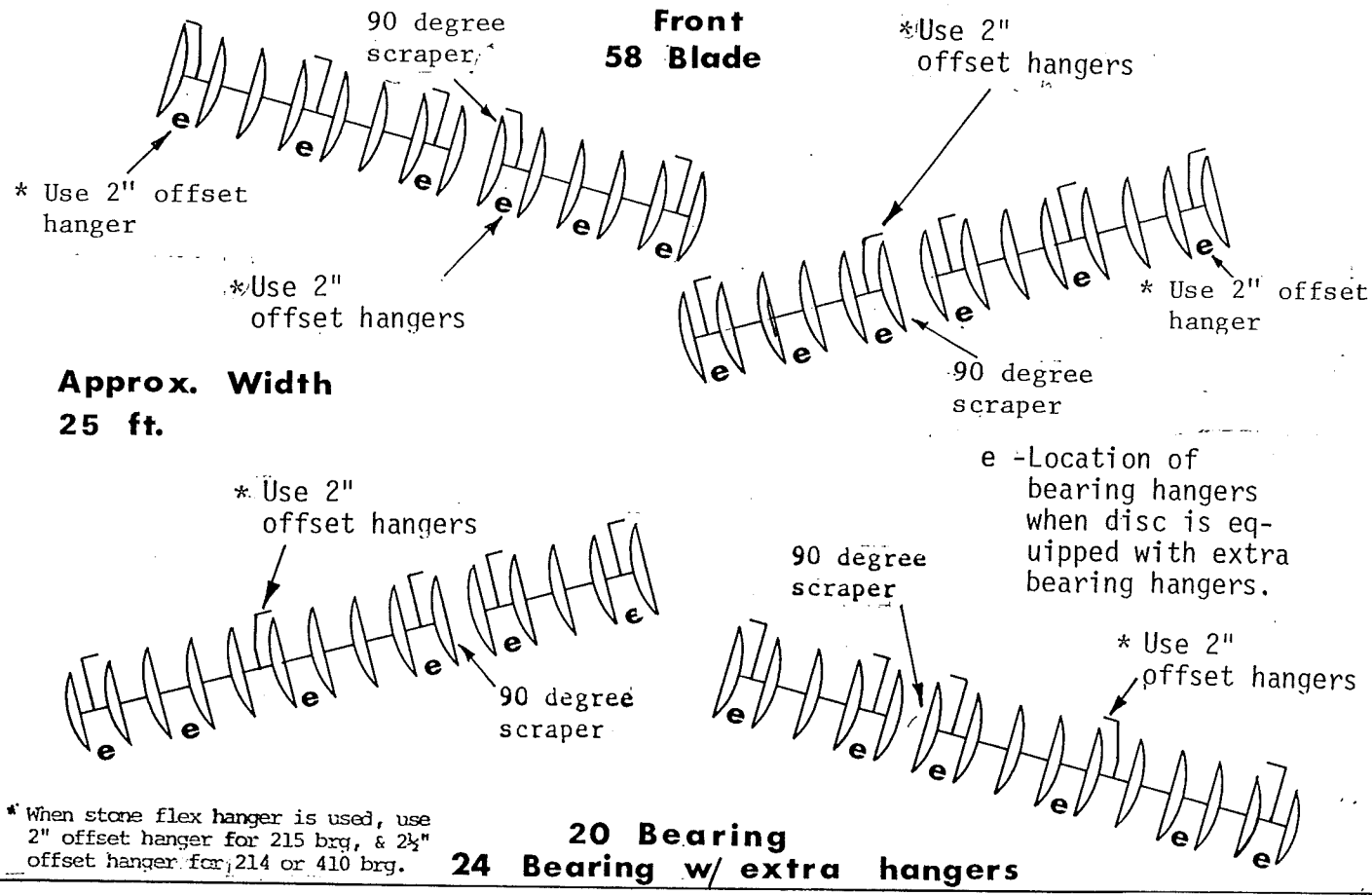

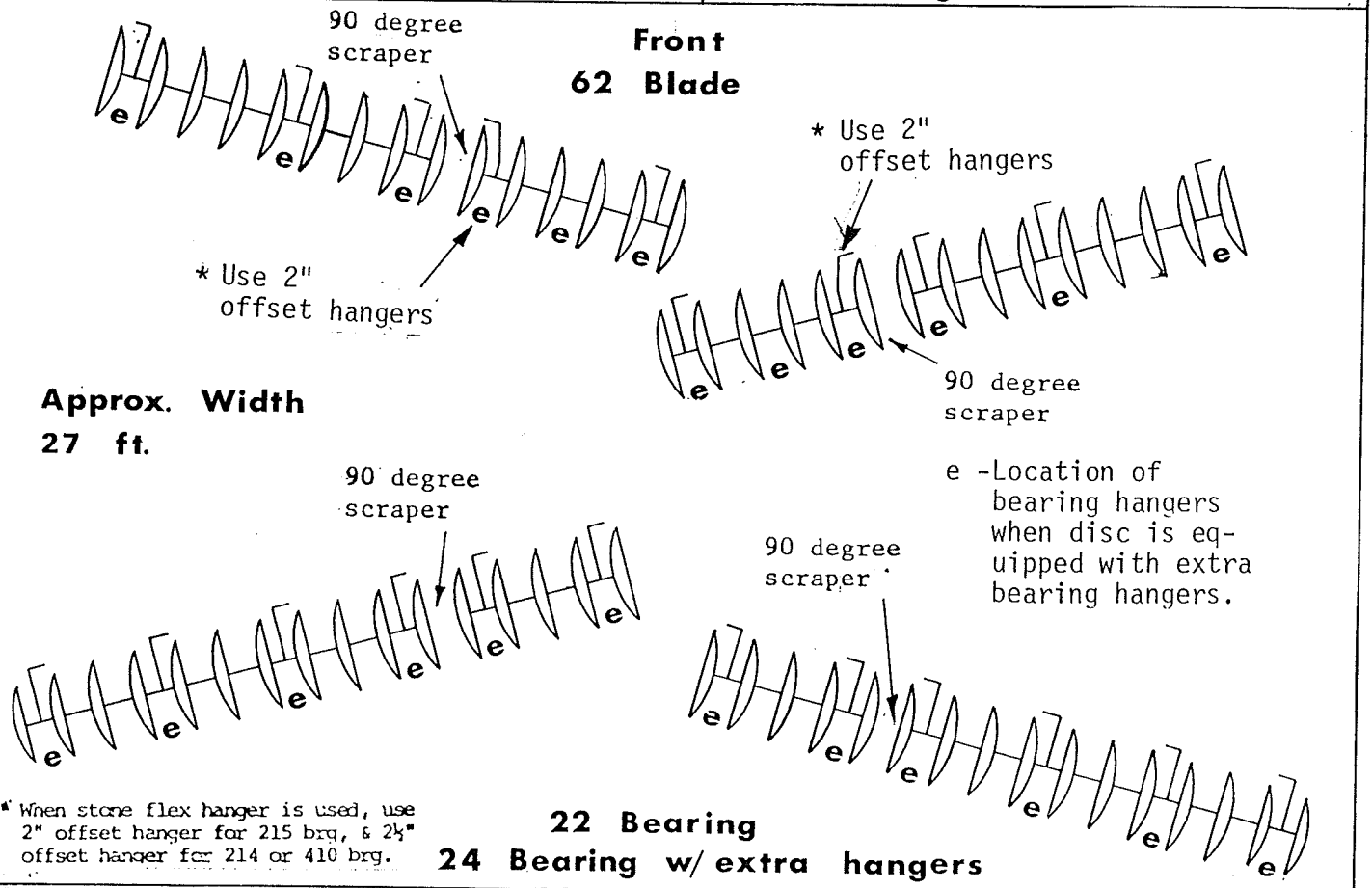

Model 3600
Disc Gang Pattern- 10½" Spacing

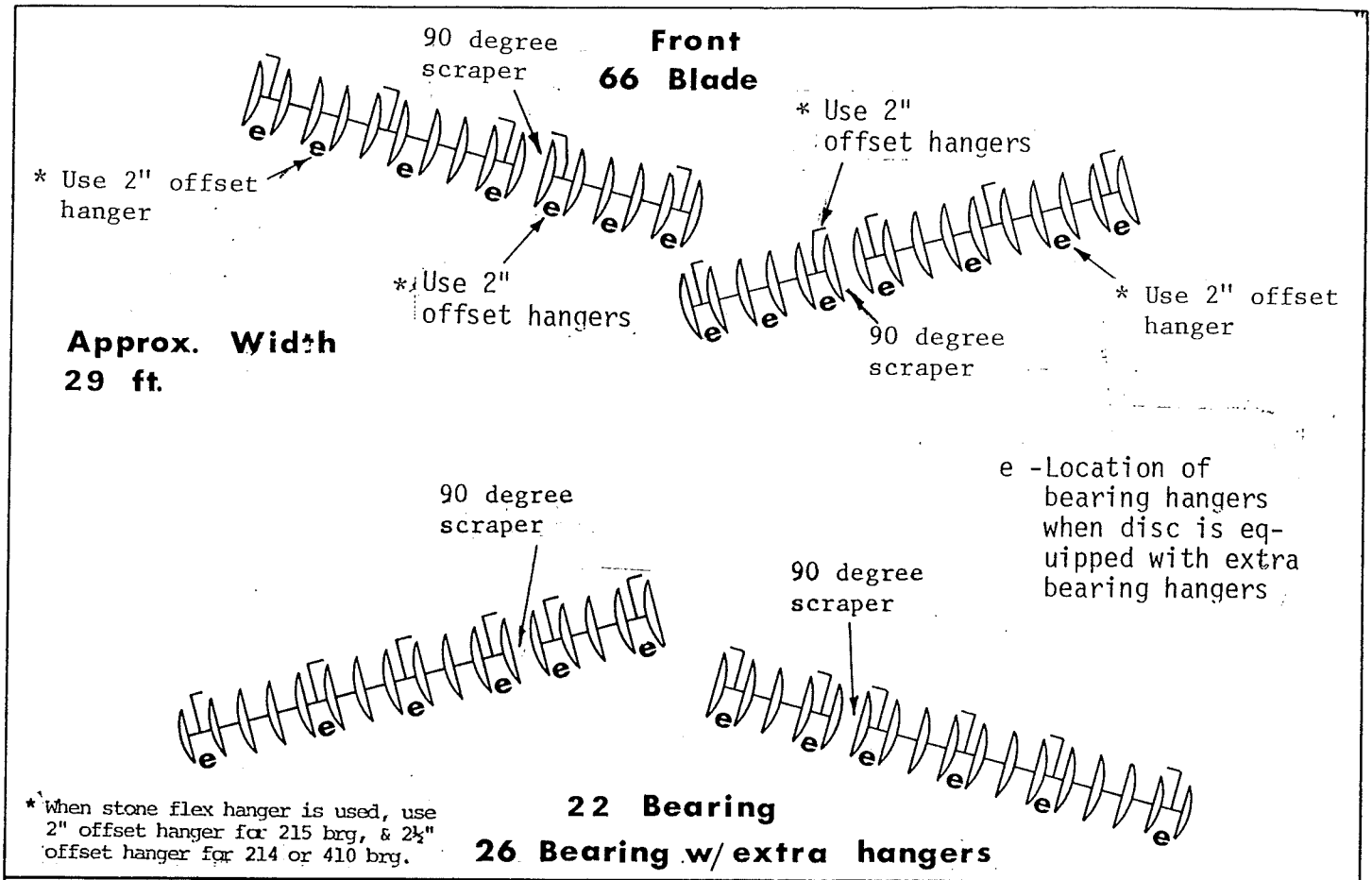

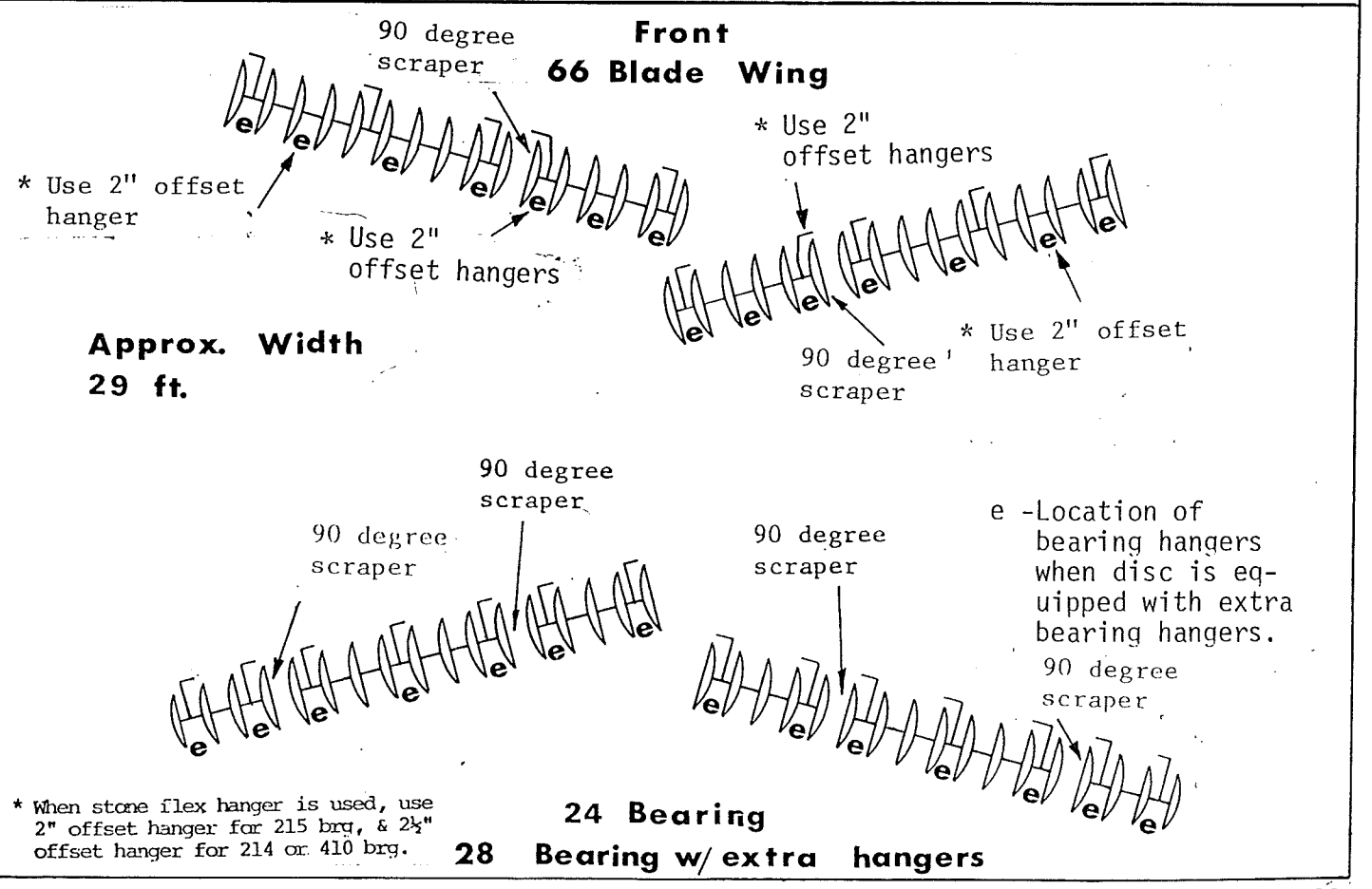

Model 3600

Disc Gang Pattern - 10½" Spacing

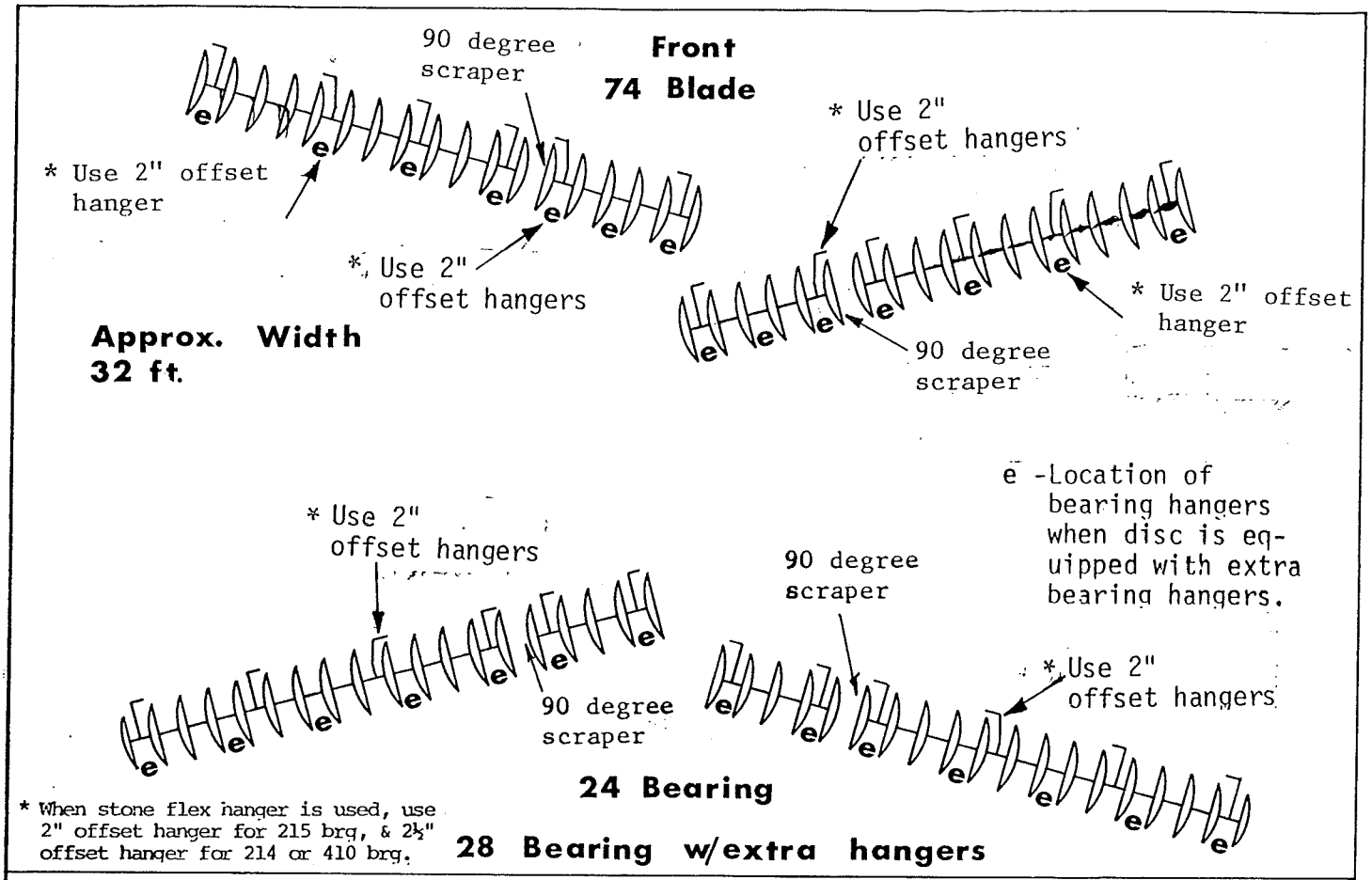

* When stone flex hanger is used, use 2" offset hanger for 215 brg, & 2½" offset hanger for 214 or 410 brg.

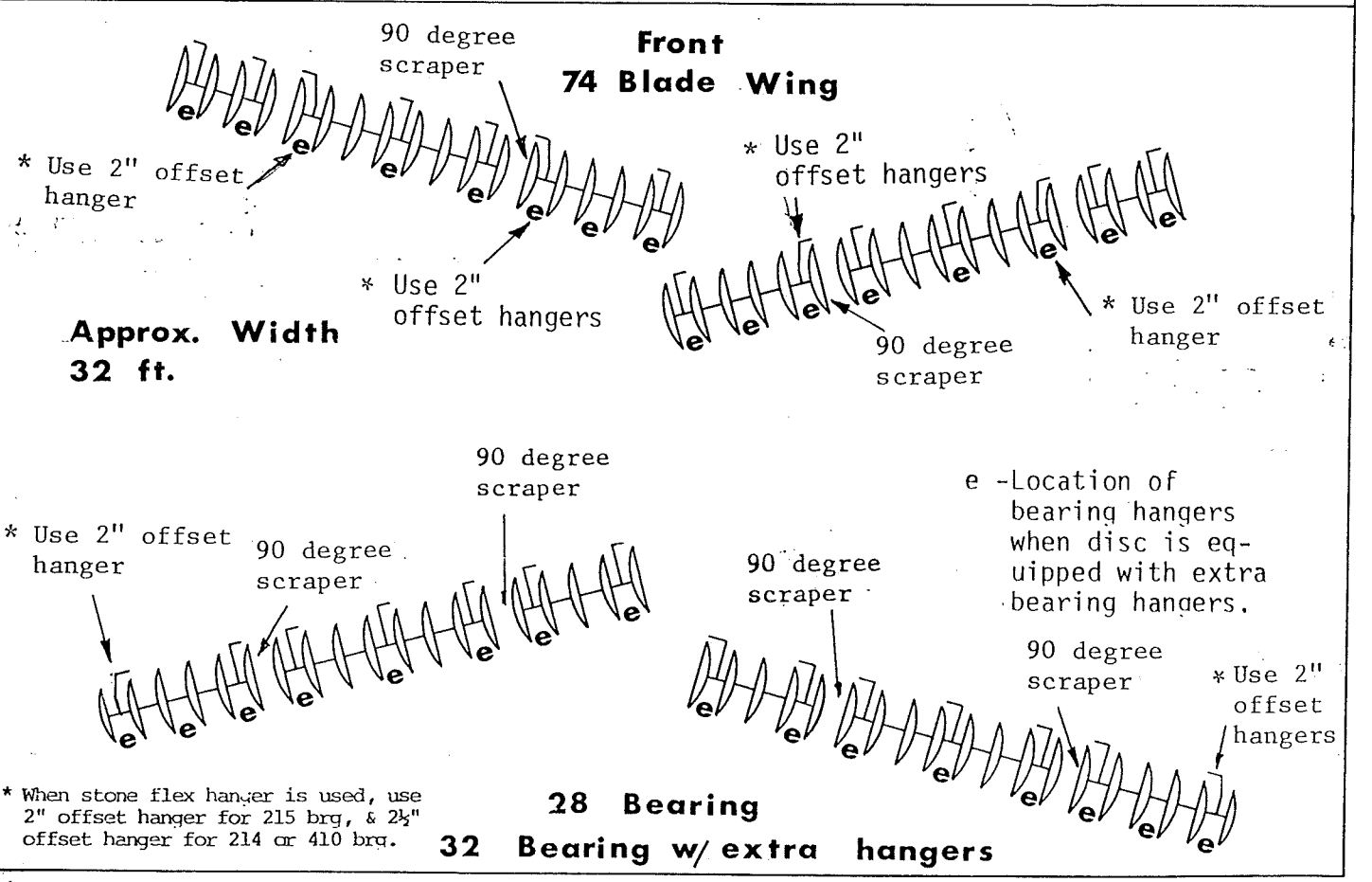

* When stone flex hanger is used, use 2" offset hanger for 215 brg, & 2½" offset hanger for 214 or 410 brg.

Model 3600

Disc Gang Pattern - 12" Spacing

Front
54 Blade

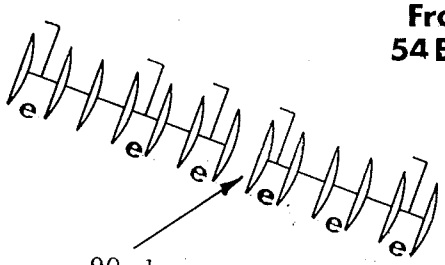

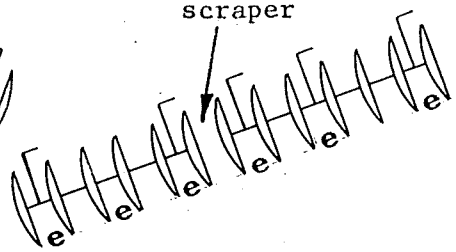

Approx. Width
26½ ft.

e– Location of bearing hangers when disc is equipped with extra bearing hangers.

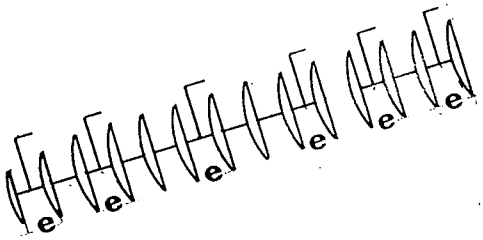

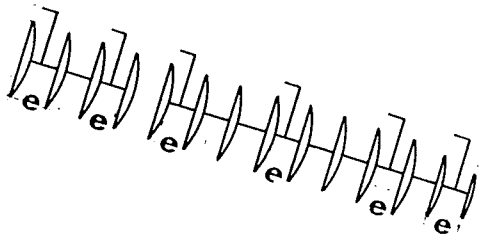

22 Bearing
24 Bearing w/ extra hangers

Front
58 Blade

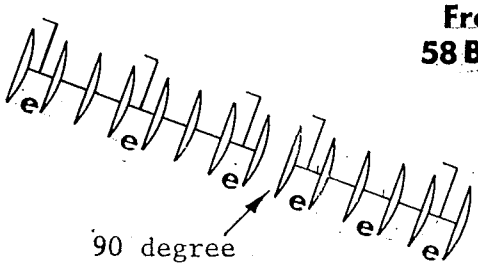

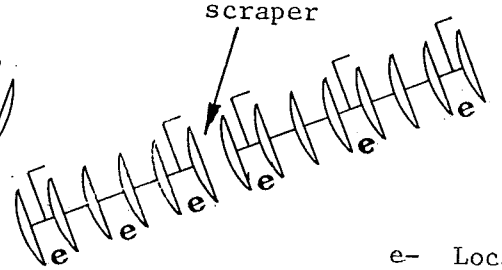

Approx. Width
28½ ft.

e– Location of bearing hangers when disc is equipped with extra bearing hangers.

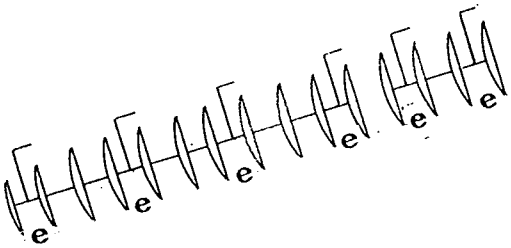

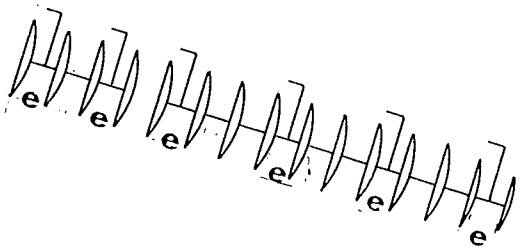

22 Bearing
24 Bearing w/ extra hangers

Model 3600

Disc Gang Pattern - 12" Spacing

Front
58 Blade Wing

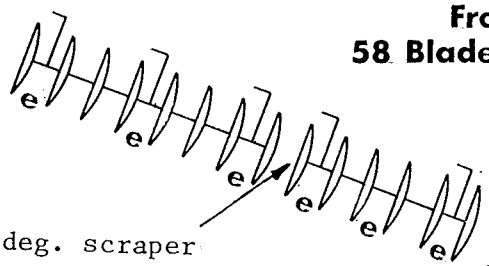

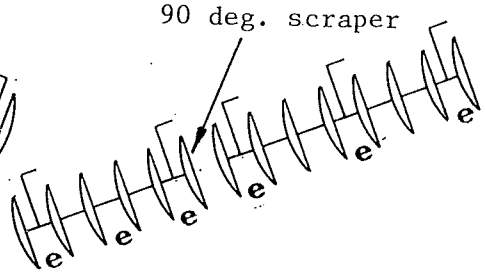

Approx. Width
28½ ft.

e- Location of bearing hangers when disc is equipped with extra bearing hangers.

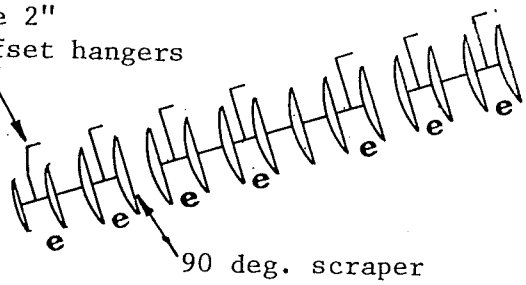

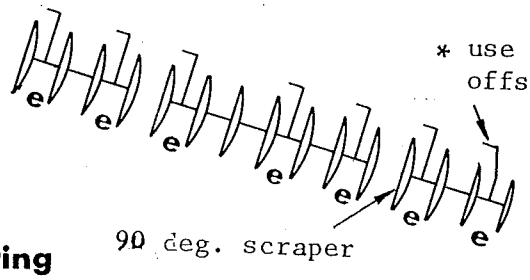

* When stone flex hanger is used, use 2" offset hanger for 215 brg, & 2½" offset hanger for 214 or 410 brg.

24 Bearing
26 Bearing w/ extra hangers

Front
66 Blade

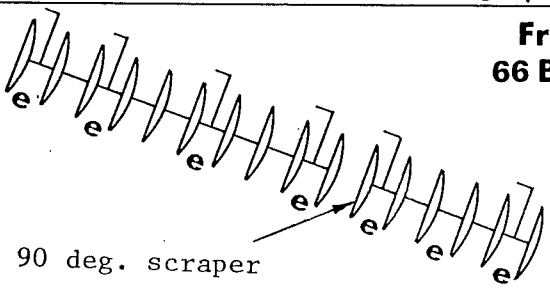

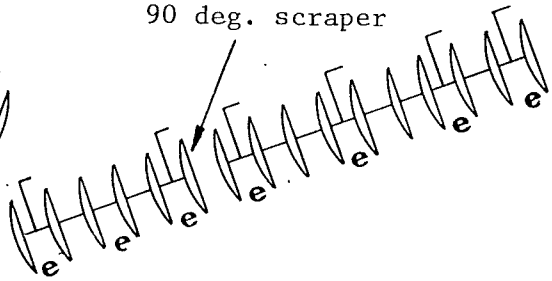

Approx. Width
32½ ft.

e- Location of bearing hangers when disc is equipped with extra bearing hangers.

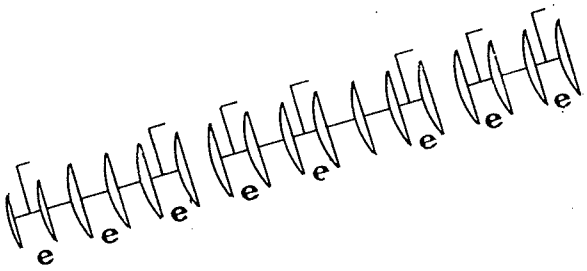

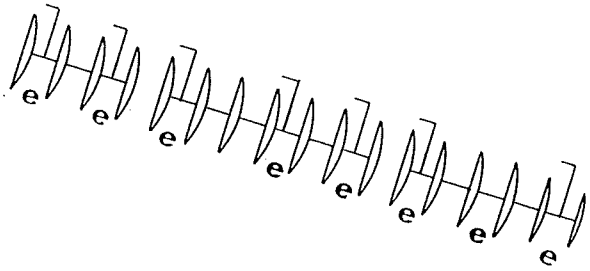

26 Bearing
30 Bearing w/ extra hangers

Model 3600

Disc Gang Pattern - 12" Spacing

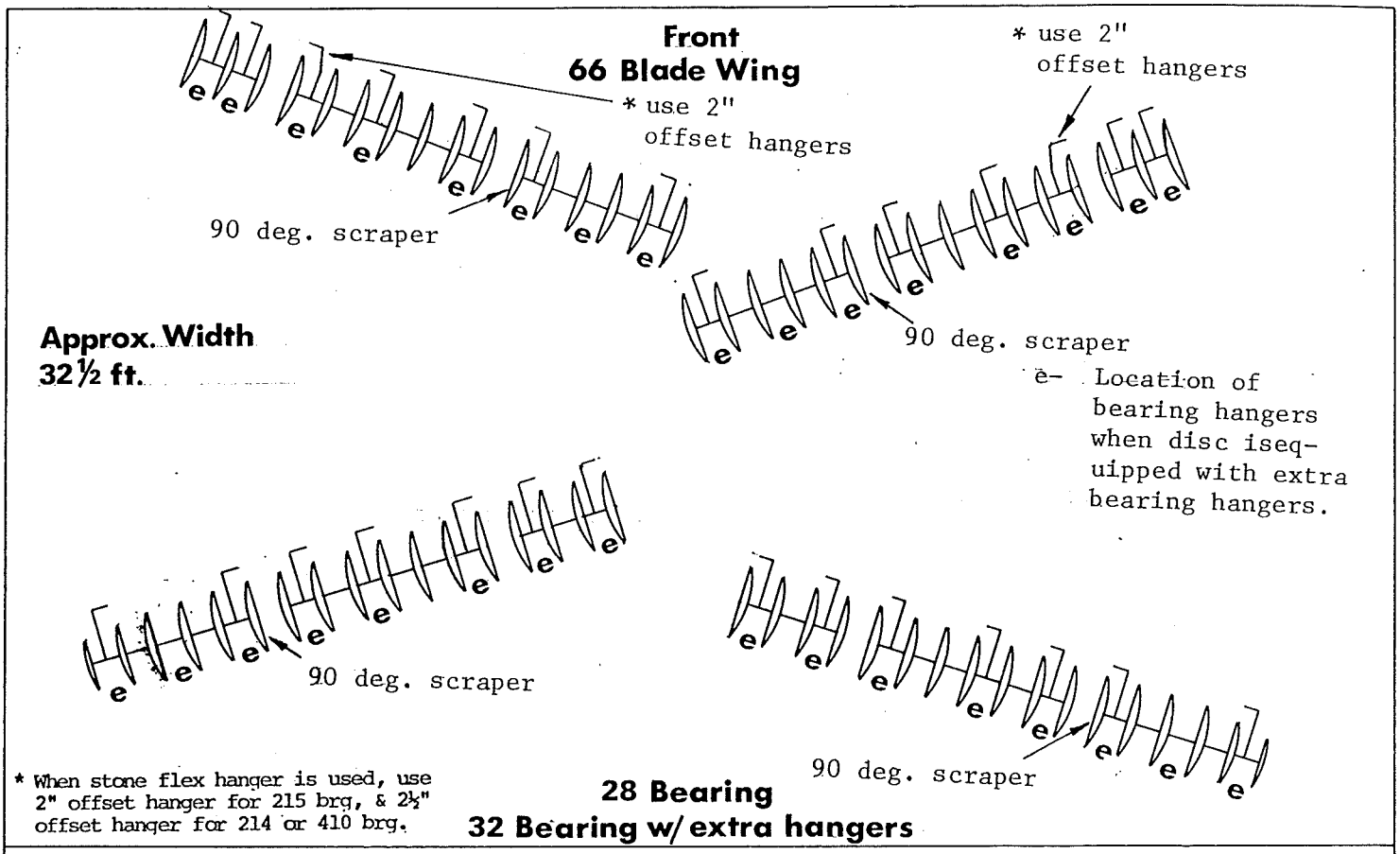

Approx. Width
32½ ft.

* When stone flex hanger is used, use 2" offset hanger for 215 brg, & 2½" offset hanger for 214 or 410 brg.

DISC BLADE FAILURES

The most common type of disc blade failures are caused by loose gang bolts, or discing in rock or stump conditions. Check gangs periodically for loose gang bolts.

Disc Blades Eligible For Warranty Replacement

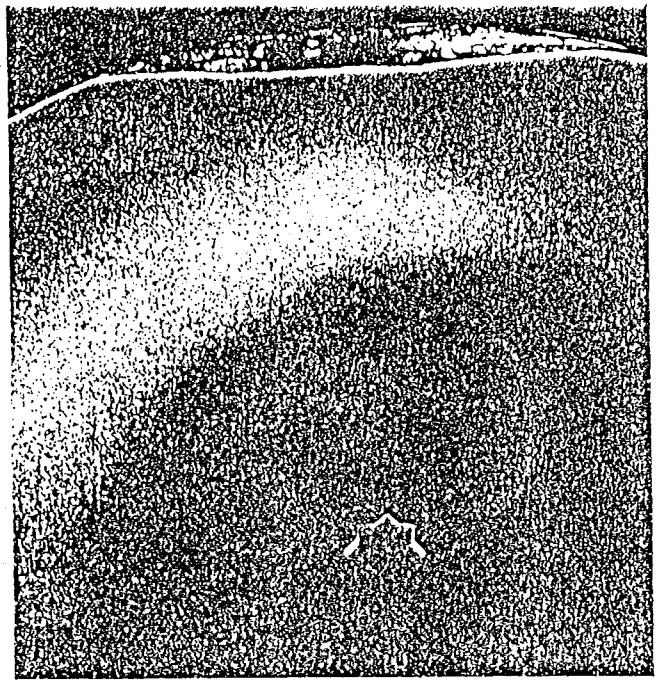

Laminated Disc - Defective Steel (Eligible)

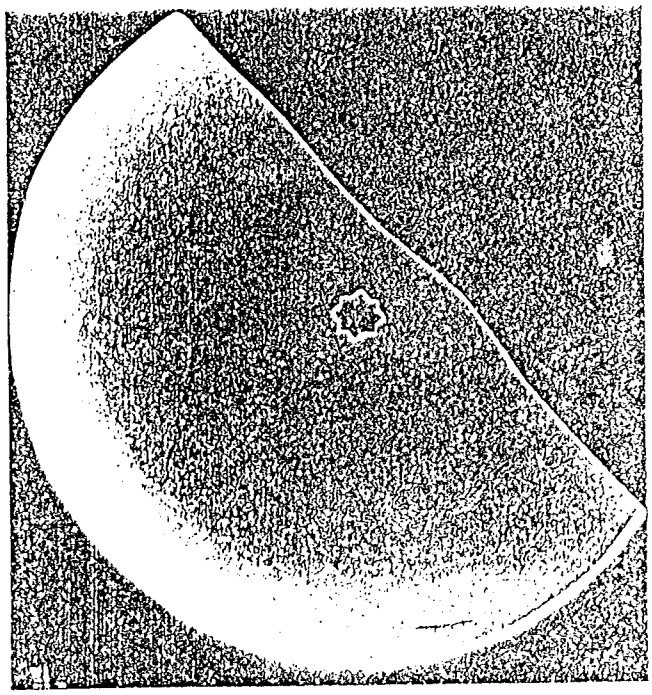

Straight Directional Break - Defective Steel (Eligible)

Disc Blades Not Eligible For Warranty Replacement

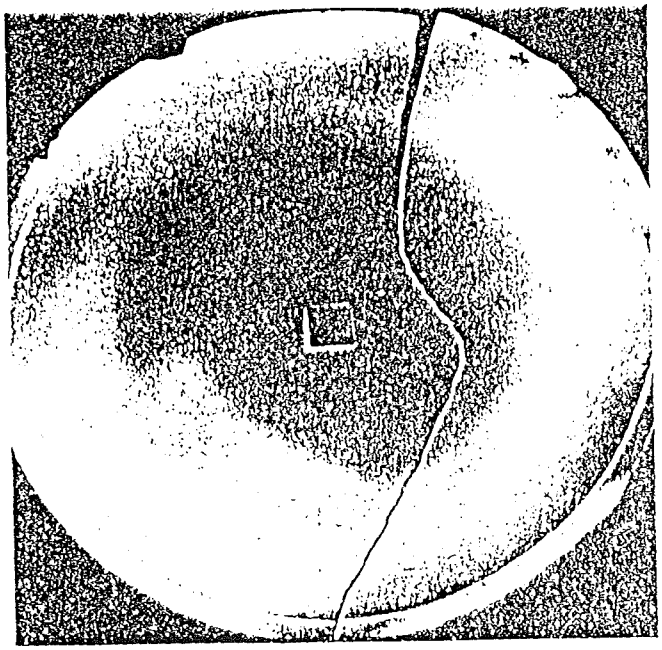

Irregular Breaks Caused by Contact against Rocks or Stumps (Not Eligible)

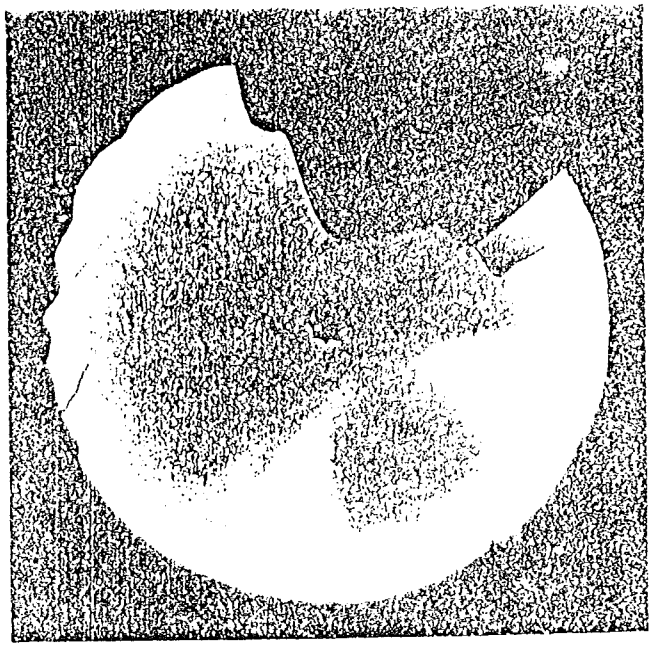

Irregular Breaks Caused by Contact against Rocks or Stumps (Not Eligible)

Not Eligible Blade Warranty Continued

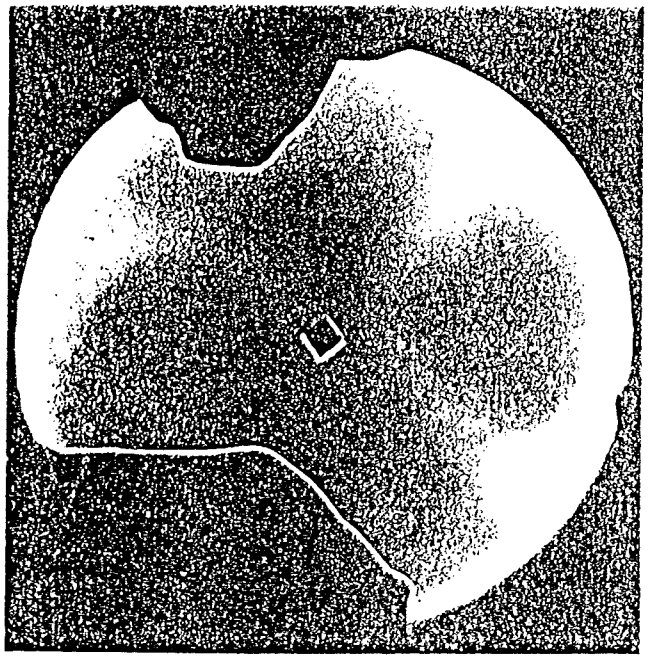

Irregular Breaks Caused by Contact against Rocks or Stumps (Not Eligible)

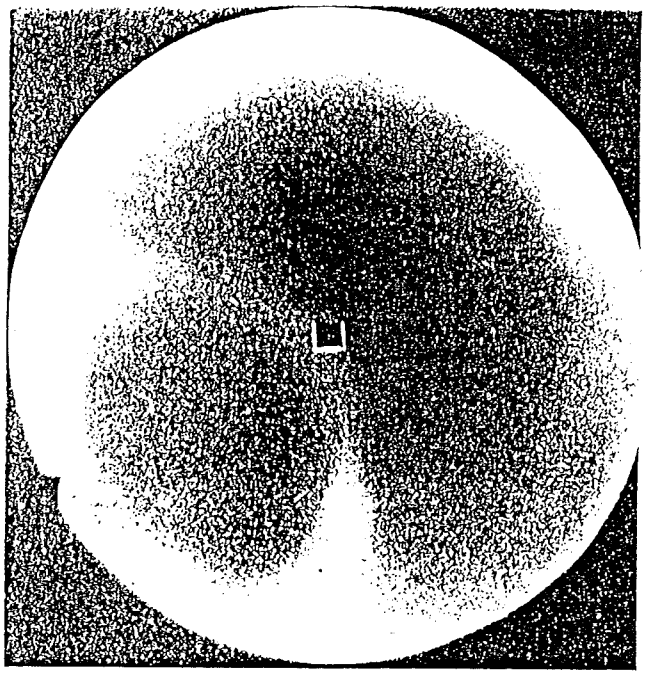

Chipping - Caused by Contact Against Rocks or Stumps (Not Eligible)

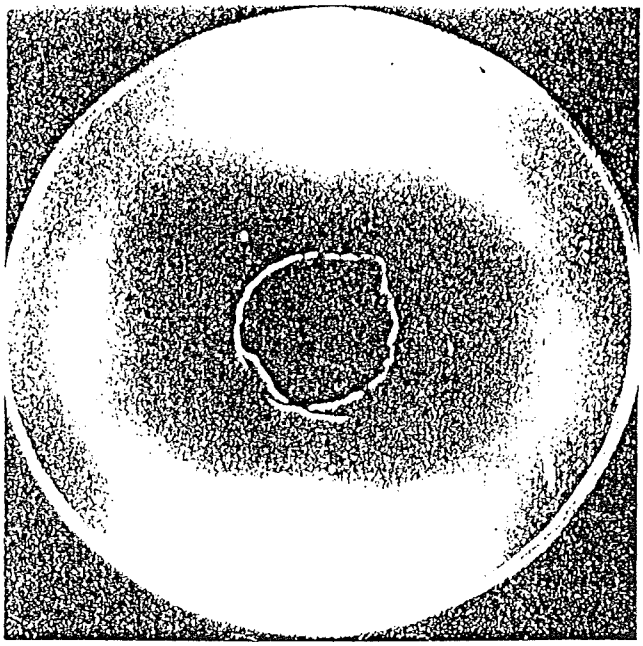

Centre Broken Out - Caused by Contact Against Rocks or Stumps or Loose Gang Bolts (Not Eligible)

PARTS LIST INDEX

PAINT AND DECALS

PART NO.	DESCRIPTION	QTY. REQ'D.
L001	EZEE-ON Yellow Paint - 1 Qt.	*
L002	EZEE-ON Yellow Paint - ½ Pt.	*
L010	EZEE-ON Decal	4
DF9510	Caution Decal - Large - 3½ x 15	1
DF9509	Caution Decal- Medium - 3½ x 7 -Repaced by Danger Decal #DF9507	2
DF9508	Caution Decal - Small - 2½ x 7	2
DF10050	Red Reflector	2
DF10057	Yellow Reflector	2
DF9507	Danger Decal- 3½ x 15	2

* As Req'd

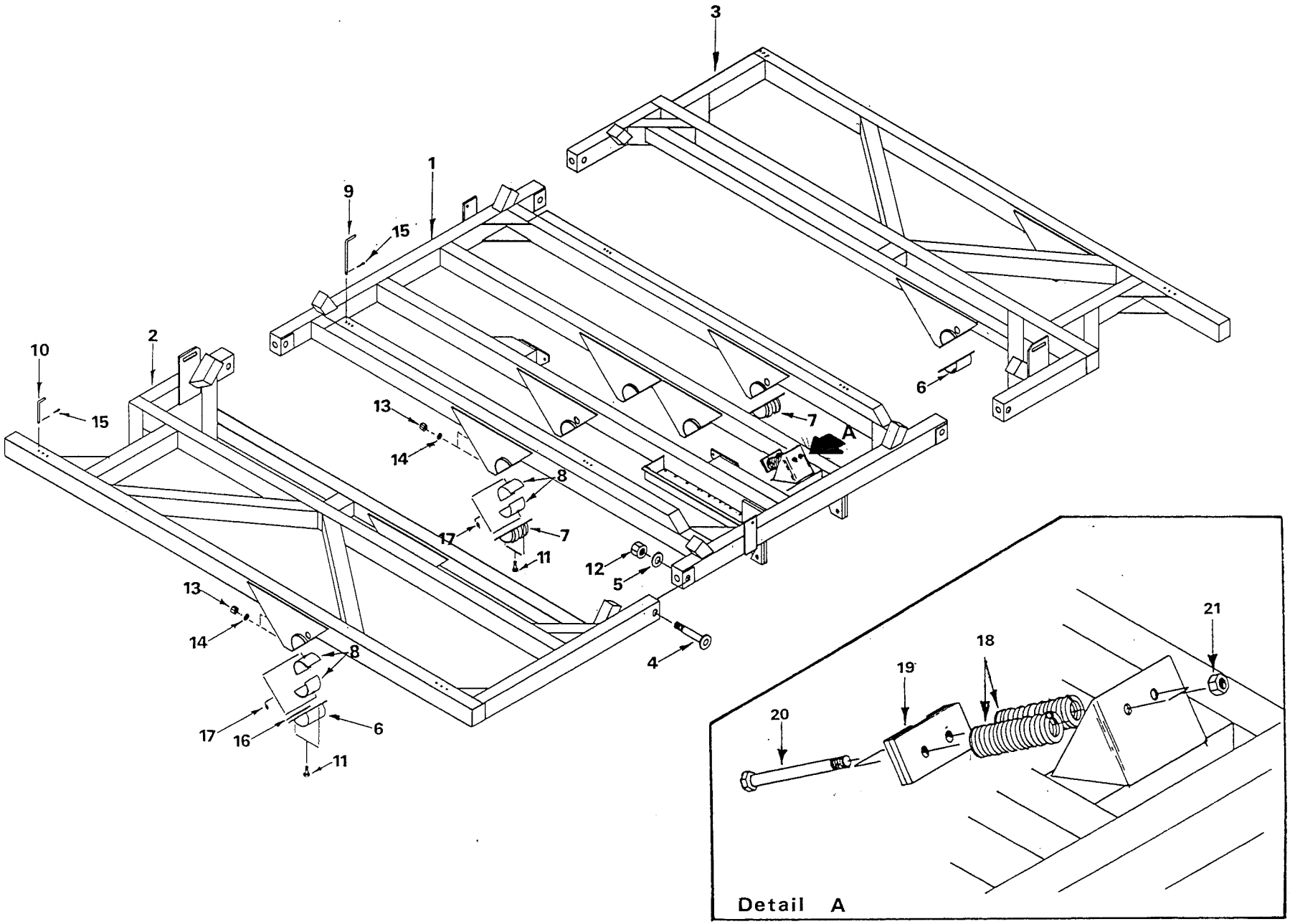

Main and Wing Frames

MODEL 3600 DISC
FRAME PARTS LIST

Ref. No.	Part No.	Description	Qty. Req'd
1	DFB5500	Main frame- c/w 5 rockshaft bearing caps, ref. #6 and 7, and gang beam retainer pin, ref. #9.	1
2	DWB5520	R.H. wing frame- c/w 2 rockshaft bearing caps,ref. #6, and gang beam retainer pin, ref. #10	1
3	DWB5540	L.H. wing frame- c/w 2 rockshaft bearing caps, ref. #6, and gang beam retainer pin ref. # 10	1
4	DFA5042	Hinge Bolt	4
5	DH3	Washer	4
6	DFA5041	Rockshaft bearing cap	7
7	DFA5080	Reinforced rockshaft bearing cap	2
8	DR5259	Rockshaft bearing liner half	18
9	DF9567	Gang beam retainer pin - long (for main frame Ref. #1	4
10	DF37	Gang beam retainer pin - short (for both wing frames - Ref. #2 and #3	4
11		3/4" x 2½" N.C. hex. bolt	18
12	DG82	2" N.C. slotted hex. nut	4
13		3/4" N.C. hex. nut	18
14		3/4" lockwasher	18
15		3/8" x 3" cotter pin	8
16	DF5063	Rockshaft bearing cap shim	54
17	DR5260 10GN1	¼" x 28 - 45 degree grease fitting - top ¼" x 28 - straight grease fitting - bottom	9 9
18	DC9615	10-7/8" long compression spring	2
19	DFA10047	Spring cushion plate	1
20		1" x 14" N.C. hex. bolt	2
21		1" N.C. hex. nut	4

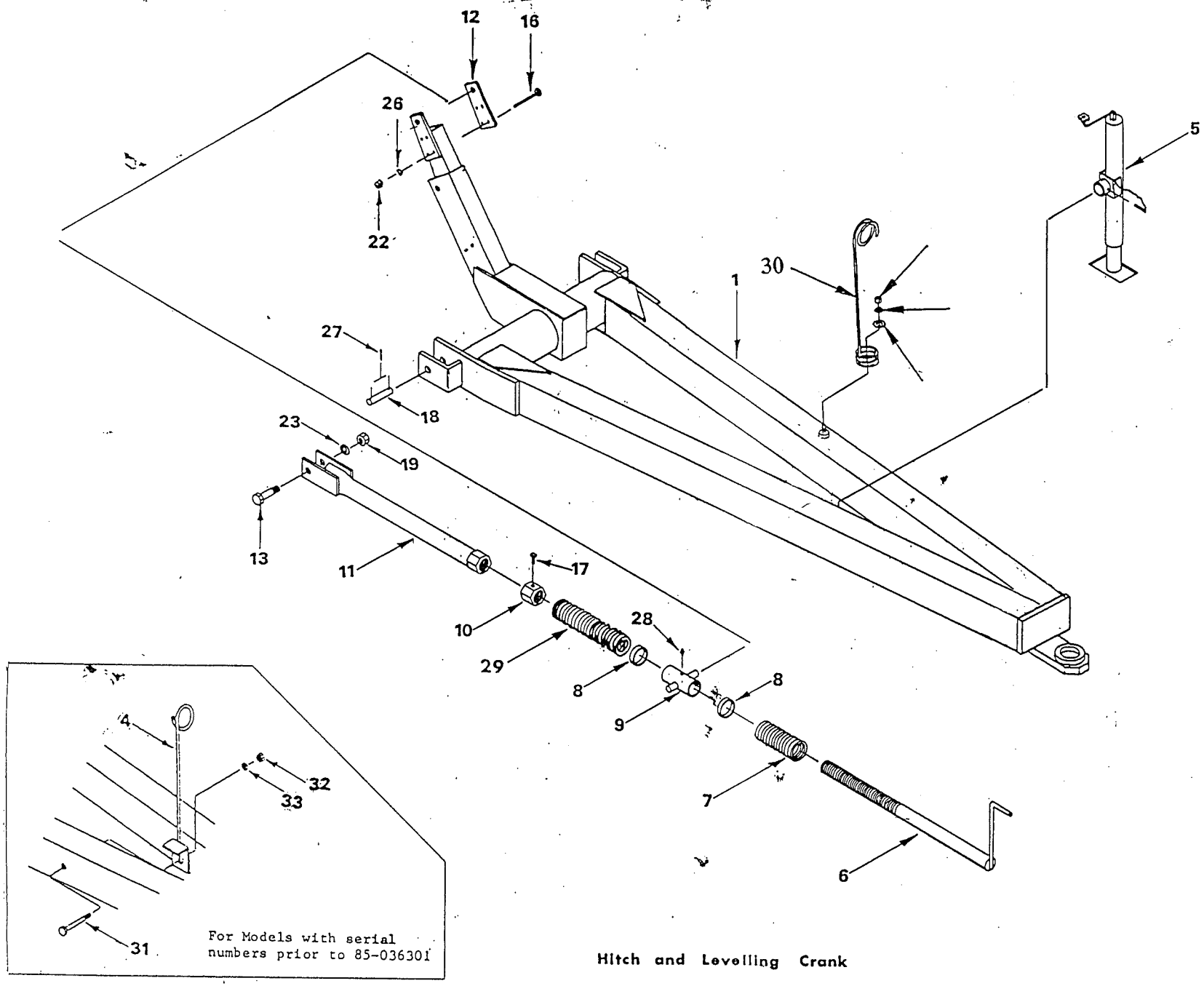

Hitch and Levelling Crank

HITCH AND LEVELLING CRANK PARTS LIST

Ref. No.	Part No.	Description	Qty. Req'd
1	DHB5650	Hitch c/w levelling arm lug ref. #12, 2 pins, ref. #~~26~~ 27, and 4 - 1" x 2½" bolts c/w nuts and lockwashers	1
2	DHA5179	Male hitch	1
3	DHA5176	Clevis hitch	1
4	DHA5161	Hose support	1
5	DHB5170	Hitch jack	1
6	DCA9970	Levellingcrank - 50" long	1
7	DC9615	Compression spring - 10-7/8" long	1
8	DC15	Thrust bearing - Timken #T199	2
9	DCA5184	Bearing tube - levelling crank	1
10	DH5	2" N.C. heavy hex. nut-drilled for set screw	1
11	DCA5195	Levelling link- (16-3/4" pipe length)	1
12	DH5146	Levelling arm lug	1
13	DR5215	1¼" x 4¼" hex. bolt (special)	1
14		1" x 2¼" N.C. hex. bolt	4
15		5/8" x 1-3/4" N.C. hex. bolt	1
16		½" x 5" N.C. hex. bolt	4
17		½" x 1" N.C. sq. head set screw	1
18	DH9605	Hitch pins	2
19		1¼" N.C. hex. nut	1
20		1" N.C. hex. nut	4
21		5/8" N.C. hex. nut	1
22		½" N.C. hex. nut	4
23		1¼" lockwasher	1
24		1" lockwasher	4
25		5/8" lockwasher	1
26		½" lockwasher	4

HITCH AND LEVELLING CRANK PARTS LIST

Ref. No.	Part No.	Description	Qty. Req'd
27		¼" x 2" cotter pin	4
28	10GN1	¼" x 28 grease fitting	1
29	DC9618	Compression spring - 21-3/8" long	1
30		11/16" I.D. x 1-3/4" O.D. flatwasher	1
31		3/4" x 6" N.C. hex bolt (used prior to models with serial no. 85-036301)	1
32		3/4" N.C. hex. nut	1
33		3/4" lockwasher	1

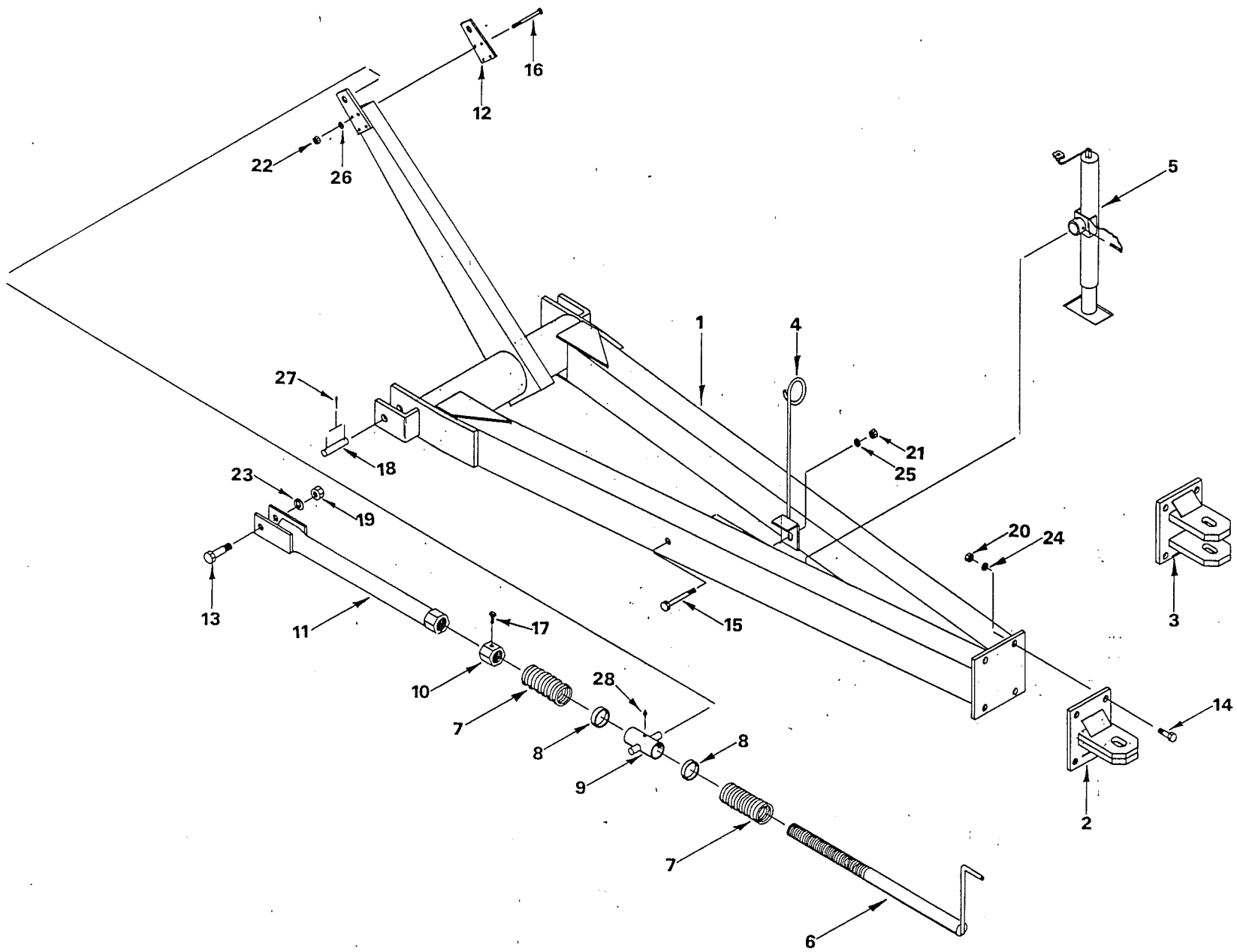

Hitch and Levelling Crank

SOLID TYPE HITCH & LEVELLING CRANK PARTS LIST

REF. NO.	PART NO.	DESCRIPTION	QTY. REQ'D.
1	DHB5545	Hitch c/w levelling arm lug (Ref. No. 12), two (2) pins (Ref. No. 27) and four (4) 1" x 3¼" bolts c/w nuts & lockwashers	1
2	DHA5179	Male hitch	1
3	DHA5176	Clevis hitch	1
4	DHA5161	Hose support	1
5	DHB5170	Hitch jack	1
6	DCA3	Levelling crank - 33" long	1
7	DC9615	Compression spring - 10-7/8" long	2
8	DC15	Thrust bearing - Timken #T199	2
9	DCA5184	Bearing tube (for levelling crank)	1
10	DH5	2" NC heavy hex. nut - drilled for set screw	1
11	DCA8577	Levelling link - 29" pipe length	1
12	DH5146	Levelling arm lug	1
13	DR5215	1¼" x 4¼" hex. bolt (special)	1
14		1" x 2¼" NC hex. bolt	4
15		3/4" x 6" NC hex. bolt	1
16		½" x 5" NC hex. bolt	4
17		½" x 1" NC square head set screw	1
18	DH9605	Hitch pin	2
19		1¼" NC hex. nut	1
20		1" NC hex. nut	4
21		3/4" NC hex. nut	1
22		½" NC hex. nut	4
23		1¼" lockwasher	1
24		1" lockwasher	4
25		3/4" lockwasher	1
26		½" lockwasher	4
27		¼" x 2" cotter pin	4
28	10GN1	¼" x 28 grease fitting	1

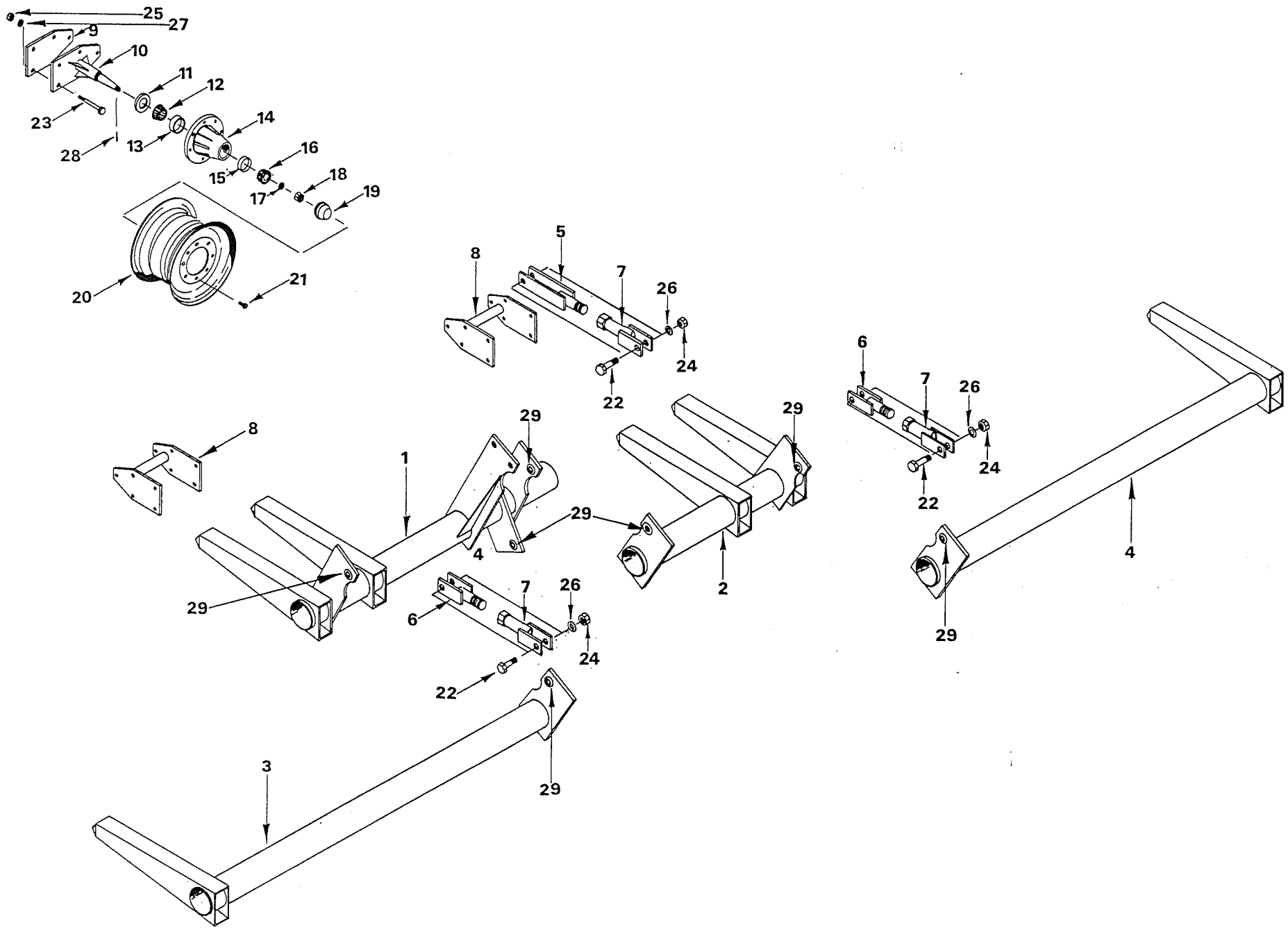

Rockshaft and Wheel

ROCKSHAFT AND WHEEL PARTS LIST

Ref. No.	Part No.	Description	Qty. Req'd
1	DRA5561	R.H. main frame rockshaft - 68-3/8" long	1
2	DRA5564	L.H. main frame rockshaft - 45-3/4" long	1
3	DRA5566	R.H. wing frame rockshaft - 96-3/8" long	1
4	DRA5569	L.H. wing frame rockshaft - 96-3/8"long	1
5	DRA9620	Male half - Rockshaft link	1
6	DRA5213	Male half - Rockshaft link	2
7	DRA5210	Female half - Rockshaft link	3
8	DRA5268	Wheel leg spacer - 11-3/4" long	2
9	DR5570	Backing plate (for wing rockshaft only)	2
10	DRA5571	Spindle	6
11	DR9680	Grease seal	6
12	DR9684	Inner cone bearing #4T-3780	6
13	DR9682	Inner cup #4T-3720	6
14	DRA9679	Hub c/w cups - 8 bolt	6
15	DR9683	Outer cup - #4T-2720	6
16	DR9685	Outer cone #4T-2790	6
17		2" O.D. x 1-1/16" I.D. x 1/8" flat washer	6
18	DR110	1" N.F. hex. slotted nut	6
19	DR9681	Hub cap	6
20	DR5574	16 x 10 8 hole rim (12.5L - 16)(12 ply)	6
21	DR125	9/16" x 1-1/8" N.F. wheel stud	48
22	DR5215	1¼" x 4¼" N.C. hex. bolt	6
23		5/8 " x 6" N.C. hex. bolt	30
24		1¼" N.C. hex. nut	6
25		5/8" N.C. hex. nut	30
26		1¼" lockwasher	6
27		5/8" lockwasher	30
28		3/16" x 1¼" cotter pin	6
29	DR5227	1¼" ball joint (weld-on	7

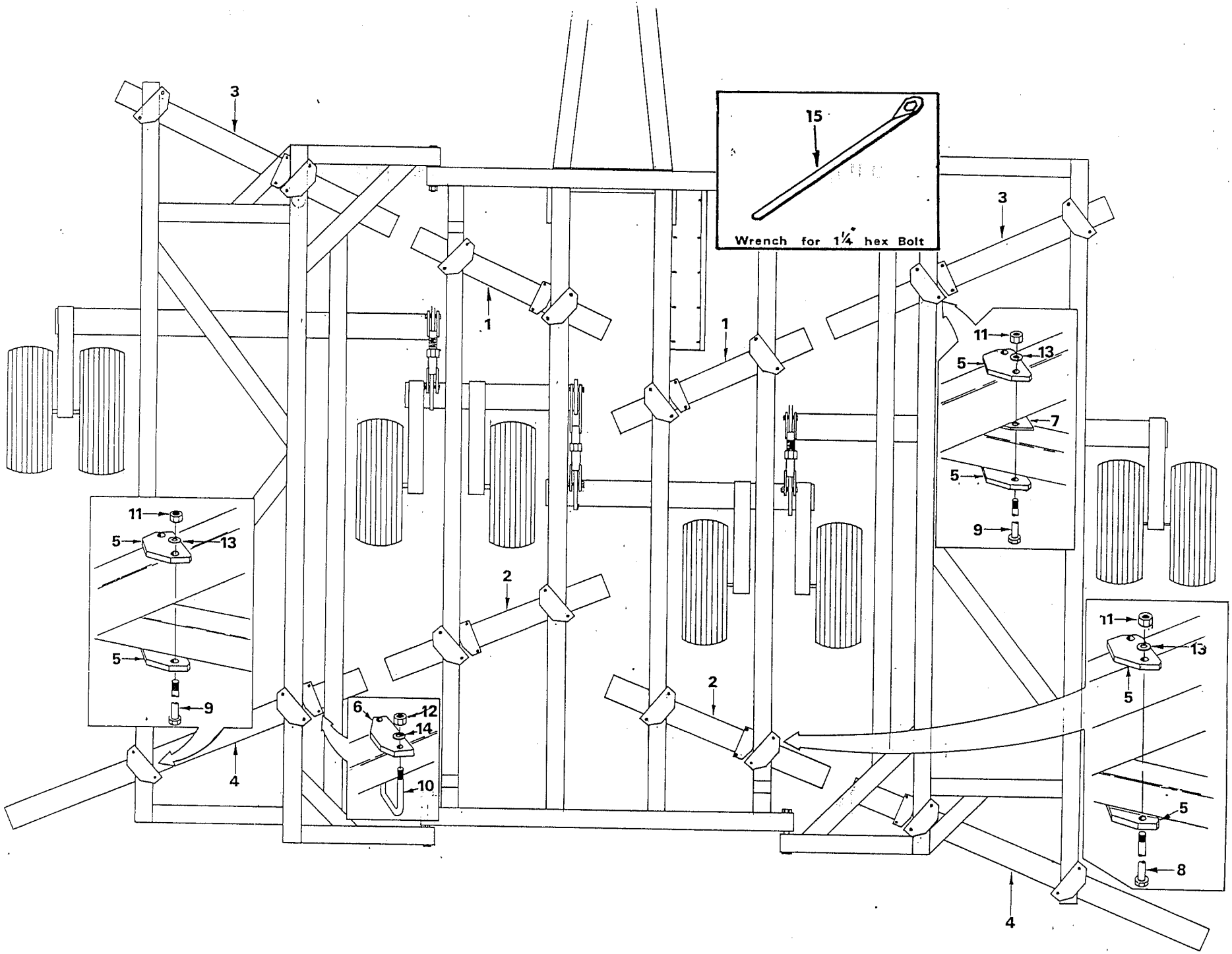

Thrust Block, Beam Clamp Plate, and Solid Type Gang Beam

THRUST BLOCK, BEAM CLAMP PLATES, AND
SOLID TYPE GANG BEAMS PARTS LIST

REF. NO.	PART NO.	DESCRIPTION	QTY. REQ'D
1.	DBS56-5	56" GANG BEAM - Front centre frame for L.H. and R.H. (For all 9" and 10-1/2" spacing models)	2
	DBS62-5	62" GANG BEAM - Front centre frame for L.H. and R.H. (For all 12" spacing models)	2
2.	DBS50-5	50" GANG BEAM - Rear centre frame for L.H. and R.H. (For all 9" and 12" spacing models)	2
	DBS56-5	56" GANG BEAM - Rear centre frame for L.H. and R.H. (For all 10-1/2" spacing models)	2
		FRONT GANG BEAMS FOR WING FRAMES SOLID TYPE GANG BEAMS	
3.	DBS77-5	77" GANG BEAM - 66 Blade, 9" spacing disc	2
	DBS83-5	83" GANG BEAM - 70 Blade, 9" spacing disc	2
	DBS106-5	106" GANG BEAM - 78 Blade, 9" spacing disc	2
	DBS124-5	124" GANG BEAM - 86 Blade, 9" spacing disc	2
	DBS77-5	77" GANG BEAM - 58 Blade, 10-1/2" spacing disc	2
	DBS92-5	92" GANG BEAM - 62 Blade, 10-1/2" spacing disc	2
	DBS98-5	98" GANG BEAM - 66 Blade, 10-1/2" spacing disc	2
	DBS124-5	124" GANG BEAM - 74 Blade, 10-1/2" spacing disc	2
	DBS77-5	77" GANG BEAM - 54 Blade, 12" spacing disc	2
	DBS92-5	92" GANG BEAM - 58 Blade, 12" spacing disc	2
	DBS110-5	110" GANG BEAM - 66 Blade, 12" spacing disc	2
		REAR GANG BEAM FOR WING FRAMES SOLID TYPE GANG BEAMS	
4.	DBS106-5	106" GANG BEAM - 66 Blade, 9" spacing disc	2
	DBS110-5	110" GANG BEAM - 70 Blade, 9" spacing disc	2
	DBS130-5	130" GANG BEAM - 78 Blade, 9" spacing disc	2
	DBS152-5	152" GANG BEAM - 86 Blade, 9" spacing disc	2
	DBS98-5	98" GANG BEAM - 58 Blade, 10-1/2" spacing disc	2
	DBS110-5	110" GANG BEAM - 62 Blade, 10-1/2" spacing disc	2
	DBS118-5	118" GANG BEAM - 66 Blade, 10-1/2" spacing disc	2
	DBS140-5	140" GANG BEAM - 74 Blade, 10-1/2" spacing disc	2
	DBS110-5	110" GANG BEAM - 54 Blade, 12" spacing disc	2
	DBS124-5	124" GANG BEAM - 58 Blade, 12" spacing disc	2
	DBS152-5	152" GANG BEAM - 66 Blade, 12" spacing disc	2
5.	DG9780	1" x 5" x 11" Gang Beam Clamp Plate	32
6.	DG160	Thrust Block	8
7.	DG163	Front gang beam shim - used to prevent front gangs from ridging (not supplied as standard equipment)	as req'd
8.		1-1/4" x 18-1/2" N.C. Hex. Bolt	8
9.		1-1/4" x 14" N.C. Hex. Bolt	24
10.	DG18	3/4" x 6" U-bolt	8
11.		1-1/4" N.C. Hex. Nut	32
12.		3/4" N.C. Hex. Nut	16
13.		2-1/2" O.D. x 1-9/32" I.D. x 1/4" Washer	32
14.		3/4" Lockwasher	16
15.	DGA5348	Wrench for 1-1/4" Hex. Bolts	2

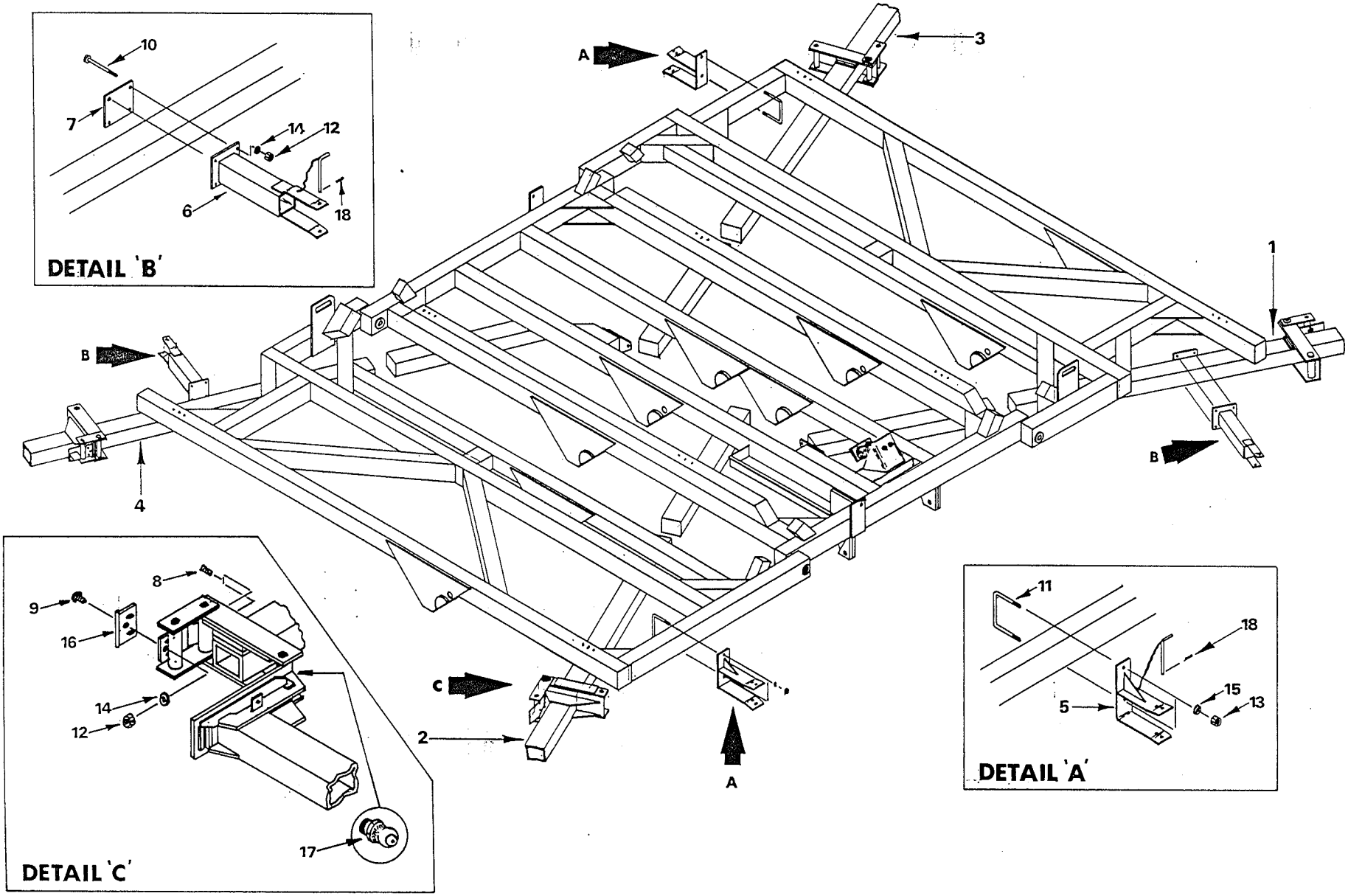

Folding Type Gang Beams and Support Brackets

FOLDING TYPE GANG BEAMS AND SUPPORT BRACKETS

Ref. No.	Part No.	Description	Qty. Req'd
1	DWB5585	79" + 44" folding gang beam - Front L.H. (for 86 blade 9" spacing disc and 74 blade 10½" spacing disc)	1
	DWB5586	79" + 38" folding gang beam - Front L.H. (for 66 blade 12" spacing disc)	1
2	DWB5587	79" + 44" folding gang beam - Front R.H. (for 86 blade 9" spacing disc and 74-blade 10½" spacing disc	1
	DWB5588	79" + 38" Folding gang beam - Front R.H. (for 66 blade 12" spacing disc)	1
3	DWB5589	79" + 58" Folding gang beam - Rear L.H. (for 78 blade 9" spacing disc and 74 blade 10½" spacing disc)	1
	DWB5590	88" + 62" Folding gang beam - Rear L.H. (for 86 blade 9" spacing disc)	1
	DWB5591	79" + 44" Folding gang beam - Rear L.H. (for 66 blade 10½" spacing disc and 58 blade 12" spacing disc)	1
	DWB5592	79" + 69" Folding gang beam - Rear L.H. (for 66 blade 12" spacing disc)	1
4	DWB5593	79" + 58" Folding gang beam - Rear R.H. (for 78 blade 9" spacing disc and 74 blade 10½" spacing)	1
	DWB5594	88" + 62" Folding gang beam - Rear R.H. (for 86 blade 9" spacing disc)	1
	DWB5595	79" + 44" Folding gang beam - Rear R.H. (for 66 blade 10½" spacing disc and 58 blade 12" spacing disc)	1
	DWB5596	79" + 69" Folding gang beam - Rear R.H. (for 66 blade 12" spacing disc)	1
5	DWA9754	Gang beam support bracket - Formed type c/w pins	*
6	DWA9746	Gang beam support bracket - Tube type c/w pin	*
7	DW9753	Backing plate	*
8		5/8" x 2" N.C. set screw	*
9		5/8" x 2¼" N.C. carriage bolt	*
10		5/8" x 7½" N.C. hex. bolt	*
11	DG18	3/4" x 6" U-bolt	*

FOLDING TYPE GANG BEAMS AND SUPPORT BRACKETS

REF. NO.	PART NO.	DESCRIPTION	QTY. REQ'D.
12.		5/8" N.C. Hex. Nut	*
13.		3/4" N.C. Hex. Nut	*
14.		5/8" Lockwasher	*
15.		3/4" Lockwasher	*
16.	DWA5630	Butt Plate	*
17.	10GN1	1/4" x 28 Grease Fitting	*
18.	DR129	Hair Pin Cotter	*

* As Req'd

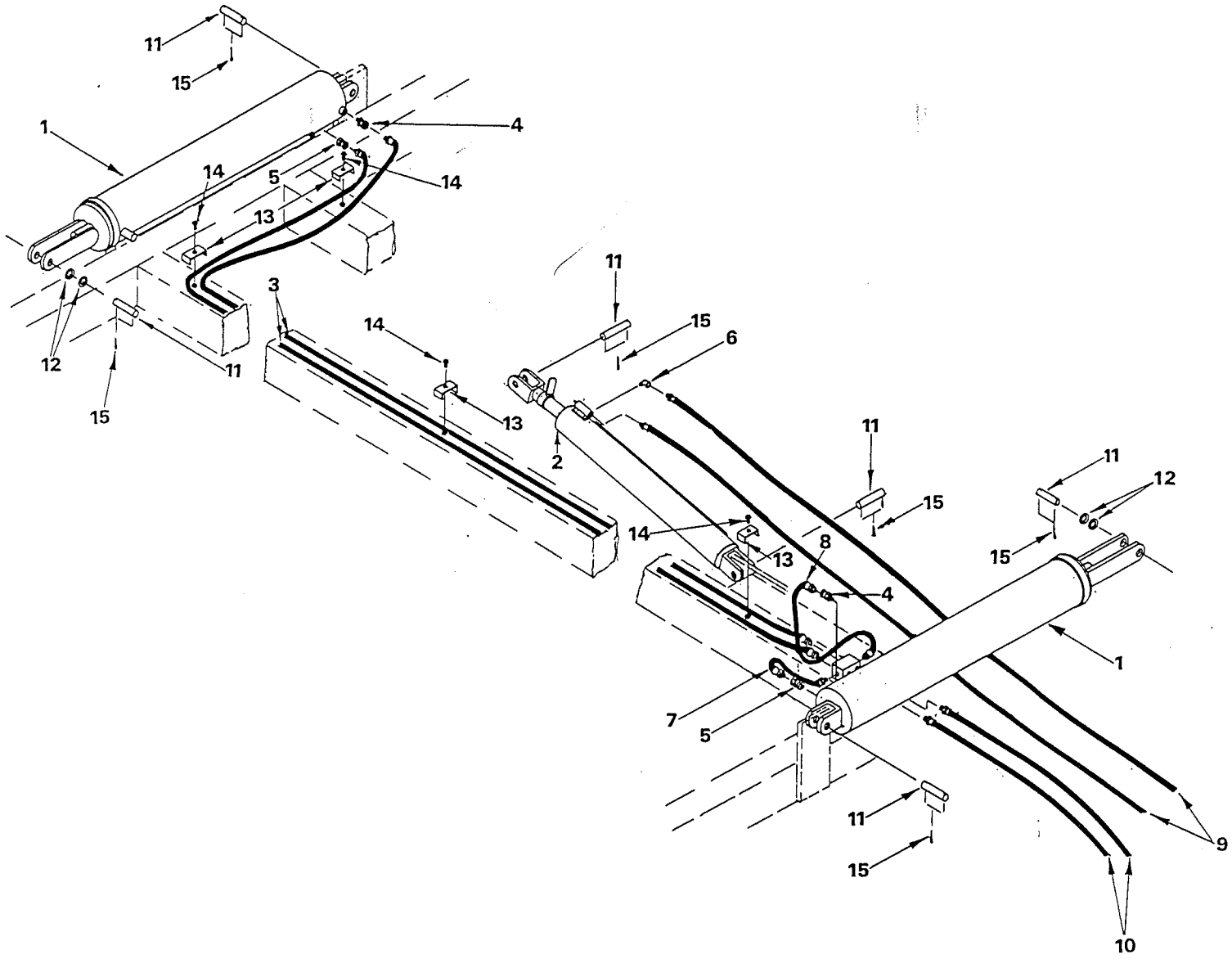

Hydraulic System

1996 AND PRIOR

HYDRAULIC SYSTEM PARTS LIST
1996 AND PRIOR

Ref. No.	Part No.	Description	Qty. req'd
1	215	5" x 36" wing lift cylinder (see parts list on page)	2
2	213	5" x 24" rockshaft cylinder c/w depth control stop - less flo-valve, elbows, and hose. (see parts list on page)	1
3	H192-S	3/8" x 192" Synflex hose	2
4	L1619	3/8" male-female swivel	2
5	L29	3/8" female swivel	2
6	DL9777	½" x 90 degree street elbow, steel (fluidic #8024-08-08)	1
7	H19	3/8" x 19" hose	1
8	H26	3/8" x 26" hose	1
9	H210-1	½" x 210" hose	2
10	H156-1	½" x 156" hose	2
11	DR5252	cylinder pin - 1¼" Dia. x 4-1/8" long	6
12	DF5068	1-5/16" I.D. x 2 O.D. washer	4
13	DL9771	2 hose hold down clip - for 3/8" hose	4
14		½" x 1" N.C. hex. bolt	4
15		¼" x 1½" cotter pin	12
16	DL5660	hydraulic block (weld-on)	1

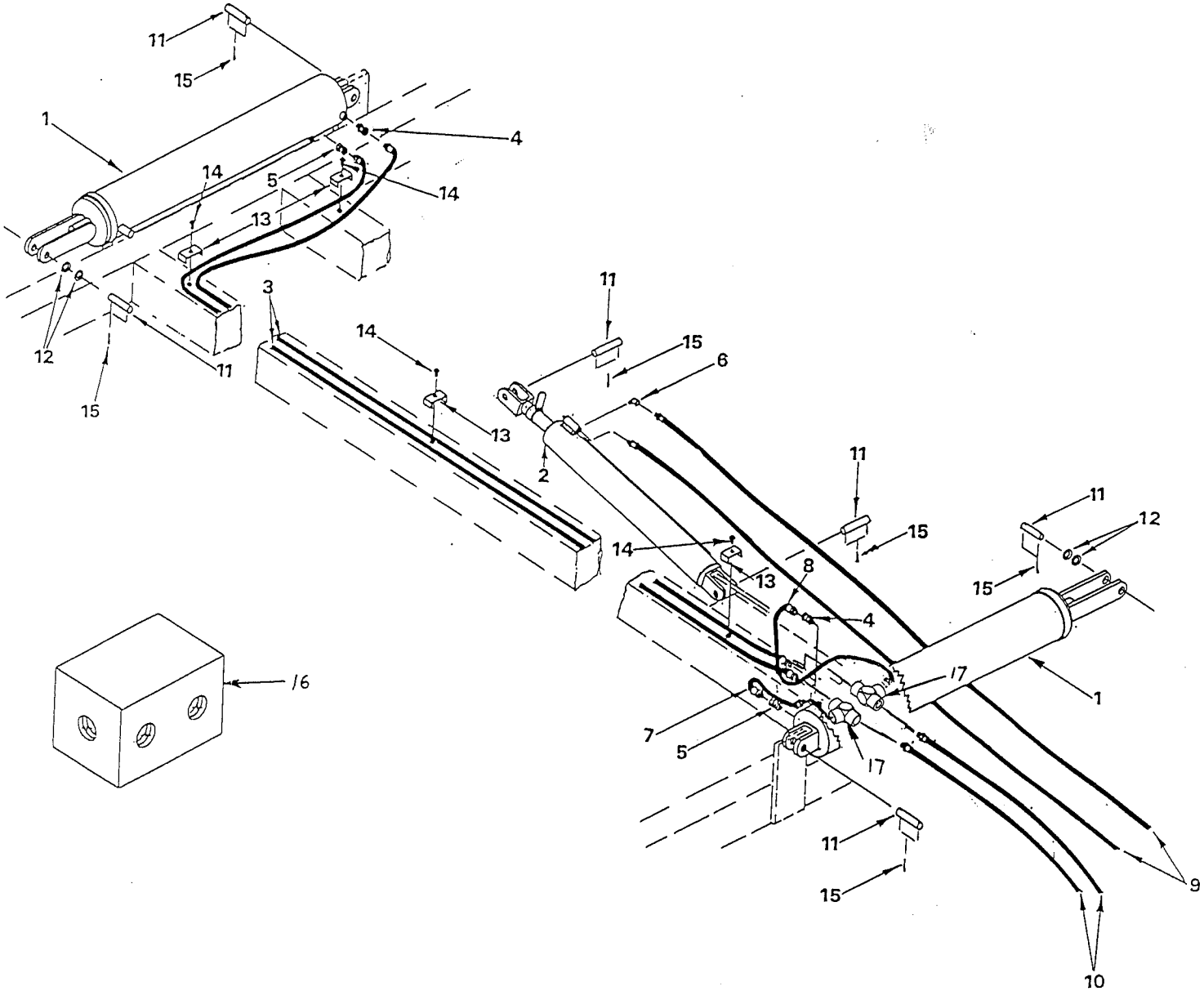

Hydraulic System
1996 AND LATER

HYDRAULIC SYSTEM PARTS LIST
1996 AND LATER

Ref. No.	Part No.	Description	Qty. req'd
1	215	5" x 36" wing lift cylinder (see parts list on page)	2
2	213	5" x 24" rockshaft cylinder c/w depth control stop - less flo-valve, elbows, and hose. (see parts list on page)	1
3	H192-S	3/8" x 192" Synflex hose	2
4	L1619	3/8" male-female swivel	2
5	L29	3/8" female swivel	2
6	DL9777	½" x 90 degree street elbow, steel (fluidic #8024-08-08)	1
7	H19	3/8" x 19" hose	1
8	H26	3/8" x 26" hose	1
9	H210-1	½" x 210" hose	2
10	H156-1	½" x 156" hose	2
11	DR5252	cylinder pin - 1¼" Dia. x 4-1/8" long	6
12	DF5068	1-5/16" I.D. x 2 O.D. washer	4
13	DL9771	2 hose hold down clip - for 3/8" hose	4
14		½" x 1" N.C. hex. bolt	4
15		¼" x 1½" cotter pin	12
16	DL5660	hydraulic block (weld-on)	1
17	DL5282	3/8" tee	2

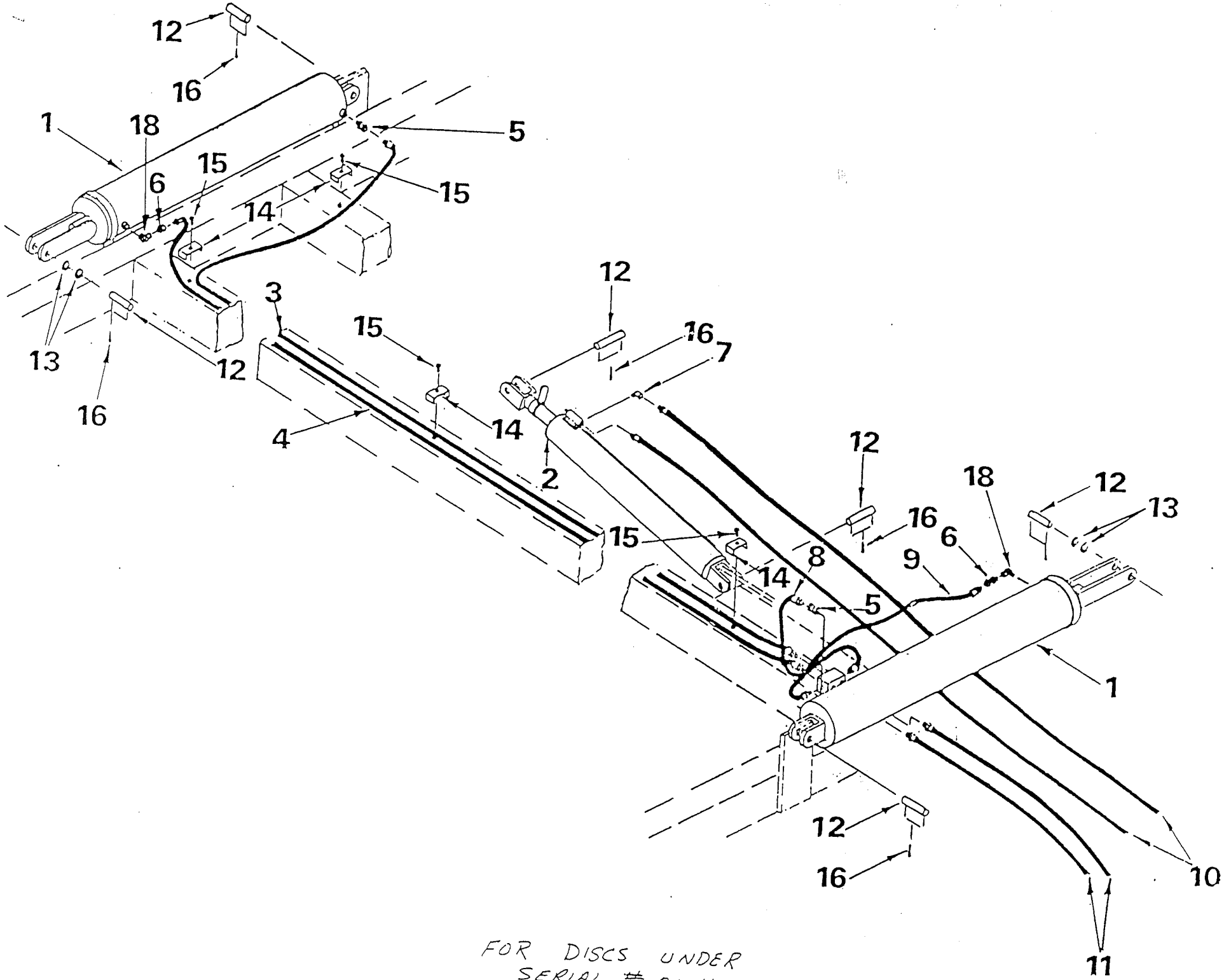

FOR DISCS UNDER
SERIAL # 21711

HYDRAULIC SYSTEM PARTS LIST

FOR DISCS UNDER SERIAL #21711

REF. NO.	PART NO.	DESCRIPTION	QTY. REQ'D.
1	242	5" x 36" wing lift cylinder (less steel oil line)	2
2	213	5" x 24" rockshaft cylinder c/w depth control stop	1
3	H192-S	3/8" x 192" Synflex hose	1
4	H180-S	3/8" x 180" Synflex hose	1
5	L1619	3/8" male-female swivel	2
6	DL5279	3/8" restricted orifice male-female swivel	2
7	DL9777	½" x 90° street elbow	1
8	H26	3/8" x 26" hydraulic hose	1
9	H53	3/8" x 53" hydraulic hose	1
10	H210-1	½" x 210" hydraulic hose	2
11	H156-1-3	3/8" x 156" hydraulic hose (one 3/8" end, one ½" end)	2
12	DR5252	1¼" diameter x 4-1/8" long cylinder pin	6
13	DF5068	1-5/16" ID x 2" OD washer	4
14	DL9771	2 hose hold-down clip (for 3/8" hose)	4
15		½" x 1" NC hex. bolt	4
16		¼" x 1½" cotter pin	12
17	DL5660	Hydraulic block (weld-on)	1
18	DL5283	3/8" x 90° street elbow (steel)	2

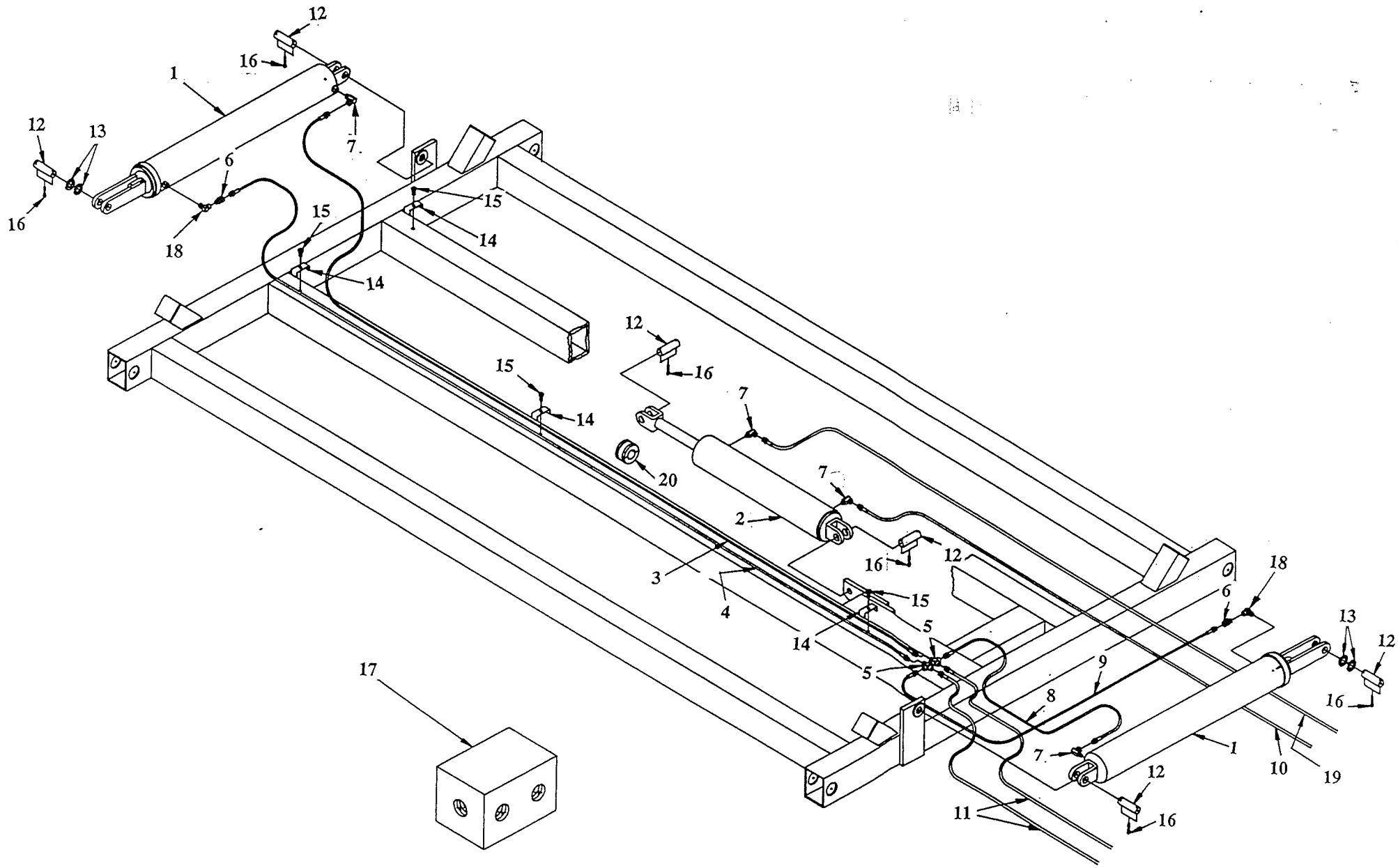
12
16
1
12
13
16
6
7
18
15
14
15
14
12
16
15
14
7
20
7
2
3
4
16
12
15
14
5
5
9
8
7
12
16
11
1
10
19
18
6
13
12
16
17

HYDRAULIC SYSTEM PARTS LIST

FOR DISCS WITH SERIAL #21711 AND UP

REF. NO.	PART NO.	DESCRIPTION	QTY. REQ'D.
1	242	5" x 36" wing lift cylinder (less steel oil line)	2
2	239	5" x 24" rockshaft cylinder (mechanical depth stop)	1
3	L2924	3/8" x 192" hydraulic hose	1
4	L2923	3/8" x 180" hydraulic hose	1
5	DL5282	3/8" TEE	2
6	DL5279	3/8" restricted orifice male-female swivel	2
7	DL9777	1/2" x 90 degree street elbow	2
8	L2906	3/8" x 26" hydraulic hose	1
9	L2946	3/8" x 53" hydraulic hose	1
10	L2971	1/2" x 184" hydraulic hose	1
11	L2972	3/8" x 156" hydraulic hose (one 3/8" end, one 1/2" end)	2
12	DR5252	1-1/4" diameter x 4-1/8" long cylinder pin	6
13	DF5068	1-5/16" I.D. x 2" O.D. washer	4
14	DL9771	2 hose hold-down clip (for 3/8" hose)	4
15		1/2" x 1" N.C. hex. bolt	4
16		1/4" x 1-1/2" cotter pin	12
17	DL5660	Hydraulic block (weld-on)	1
18	DL5283	3/8" x 90 degree street elbow (steel)	2
19	L3003	1/2" x 210" hydraulic hose	1
20	CR50711	Depth control stop ring - 1" long	
	CR50712	Depth control stop ring - 1-1/2" long	
	CR50713	Depth control stop ring - 1-3/4" long	
	CR50714	Depth control stop ring - 2" long	
	CR50717	Depth control stop ring - 4-1/4" long	

DISC GANG ASSEMBLY (FOR GANGS WITH 211 OR 214 SERIES BEARINGS)
3600 SERIES DISC

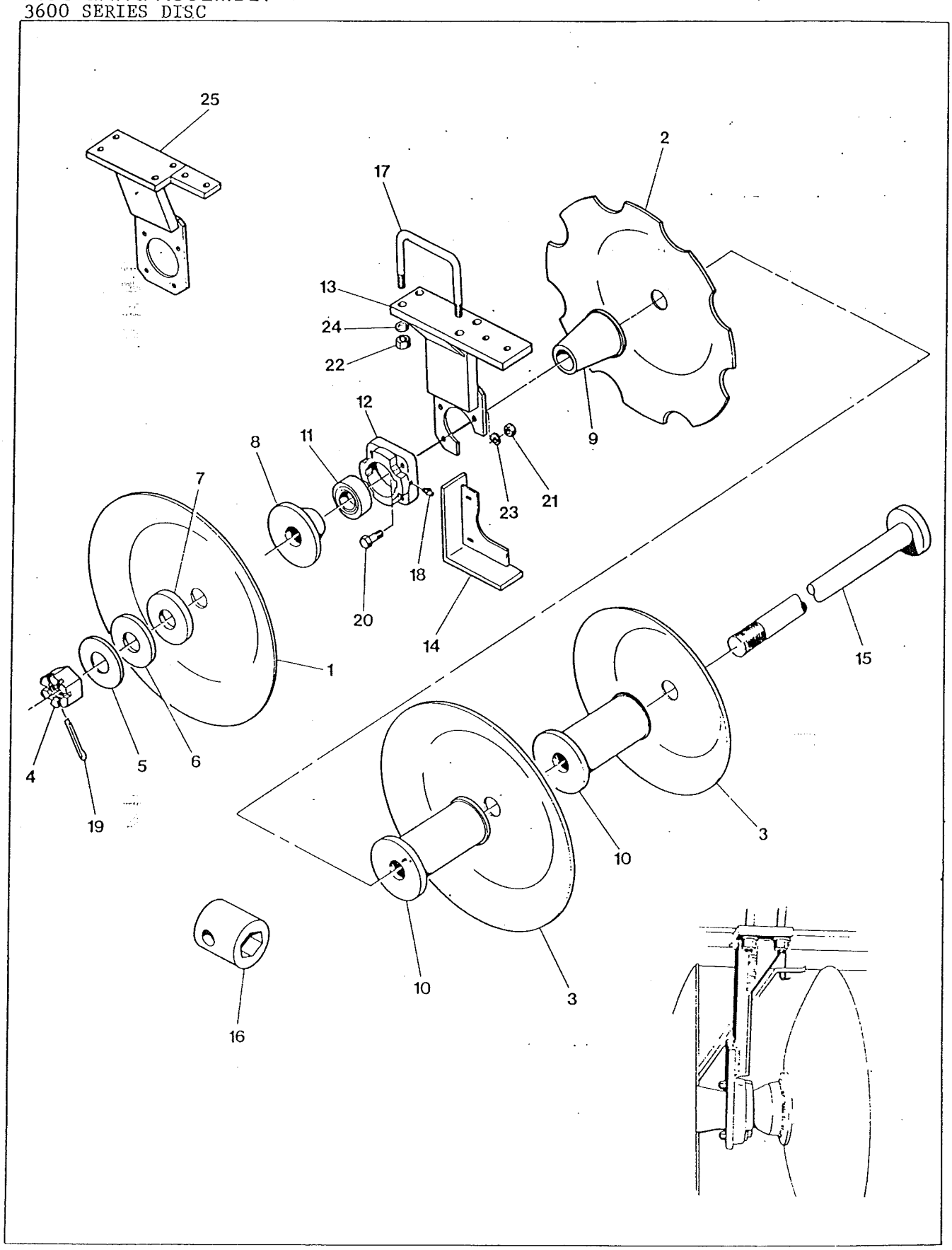

DISC GANG ASSEMBLY
FOR 211, 214 OR 410 SERIES BEARING

ITEM	PART NUMBER	DESCRIPTION	QTY REQ'D
1		BLADE, Plain Disc (See DISC BLADES for breakdown)	*
2		BLADE, Notched Disc (See DISC BLADES for breakdown)	*
3		BLADE, Plain Outrigger (See DISC BLADES for breakdown)	*
4	DG82	NUT, Heavy, Hex Slotted, 2 - 7 UNC	*
5	DG89	WASHER, Shim, 1/4	*
6	DG88	WASHER, Shim, 1/2	*
7	DG78	WASHER, 2 ID x 5 OD x 5/8	*
8	DGA106	SPOOL, 9" & 10½" spacing short half, for 211 214 & 410 bearings. 3¼" long (convex side) w/6" washer	*
	DGA110	SPOOL, 12" spacing short half, for 211, 214 & 410 bearings. 4-3/4" long (convex side) w/6" washer	*
9	DGA102	SPOOL, 9" spacing long half for 211 bearings. 4-7/16" long (concave side)	*
	DGA103	SPOOL, 9" spacing long half for 214 bearings. 4-3/16" long (concave side)	*
	DGA136	SPOOL, 9" spacing long half for 410 bearings. 3-11/16" long (concave side)	*
	DGA104	SPOOL, 10½" & 12" spacing long half for 211 bearings. 5-15/16" long (concave side)	*
	DGA105	SPOOL, 10½" & 12" spacing long half for 214 bearings. 5-11/16" long (concave side)	*
	DGA131	SPOOL, 10½" & 12" spacing long for 410 bearings. 5¼" long (concave side)	*
11	DG95	BEARING, Greaseable, 211 Series	*
	DG38	BEARING, Greaseable, 214 Series	*
	DG108	BEARING, Greaseable, 410 Series	*
12	DGB5334	HOUSING, Bearing, 211 Series (Incl. items 11, 18)	*
	DGB5335	HOUSING, Bearing, 214 Series (Incl. items 11, 18)	*
	DG109	HOUSING, Bearing, 410 Series (Incl. items 11, 18)	*
13	DGA5315	HANGER, Bearing, Right-hand, 211 Series	*
	DGA5317	HANGER, Bearing, Left-hand, 211 Series	*
	DGA5318	HANGER, Bearing, Right-hand, 214, 410 Series	*
	DGA5319	HANGER, Bearing, Left-hand, 214, 410 Series	*
14	DGA37	SAND GUARD, Right-hand, 211 Series (California only)	
	DGA38	SAND GUARD, Left-hand, 211 Series (California only)	*
	DGA39	SAND GUARD, R.H., 214, 410 Series (California Only)	*
	DGA40	SAND GUARD, L.H., 214, 410 Series (California Only)	*
15		BOLT, Gang (See DISC GANG BOLTS for breakdown)	*
16	DGA35	WRENCH, Socket	*
17	DG5314	U-BOLT, 7/8 - 9 UNC x 6-3/8	*
18	10GN1	FITTING, Grease, Straight, 1/4 - 28 SAE	*
19		COTTERPIN, 3/8 dia. x 3 in.	*

DISC GANG ASSEMBLY
FOR 211, 214 OR 410 SERIES BEARING CONT'D

ITEM	PART NUMBER	DESCRIPTION	QTY REQ'D
20		CAPSCREW, Hex, 1/2 - 13 UNC x 2, 211 Series	*
		CAPSCREW, Hex, 1/2 - 13 UNC x 2¼, 211 Series with sand guard	*
		CAPSCREW, Hex, 5/8 - 11 UNC x 2¼, 214, 410 Series	*
		CAPSCREW, Hex, 5/8 - 11 UNC x 2½, 214, 410 Series with sand guards	*
21		NUT, Hex, 5/8 - 11 UNC, 214, 410 Series	*
		NUT, Hex, 1/2 - 13 UNC, 211 Series	*
22		NUT, Hex, 7/8 - 9 UNC	*
23		LOCKWASHER, Helical Spring, 1/2 ID, 211 Series	*
		LOCKWASHER, Helical Spring, 5/8 ID, 214 Series	*
24		LOCKWASHER, Helical Spring, 7/8 ID	*
25	DGA5320	HANGER, 2 in. Offset, Right-hand, 211 Series	*
	DGA5321	HANGER, 2 in. Offset, Left-hand, 211 Series	*
	DGA5322	HANGER, 2 in. Offset, Right-hand, 214, 410 Series	*
	DGA5323	HANGER, 2 in. Offset, Left-hand, 214, 410 Series	*
	DGA9080	HANGER, 3-1/2 in. Offset, Left-hand, 211 Series	*
	DGA9081	HANGER, 3-1/2 in. Offset, Right-hand, 211 Series	*
	DGA9082	HANGER, 3-1/2 in. Offset, Left-hand, 214, 410 Series	*
	DGA9083	HANGER, 3-1/2 in. Offset, Right-hand, 214, 410 Series	*

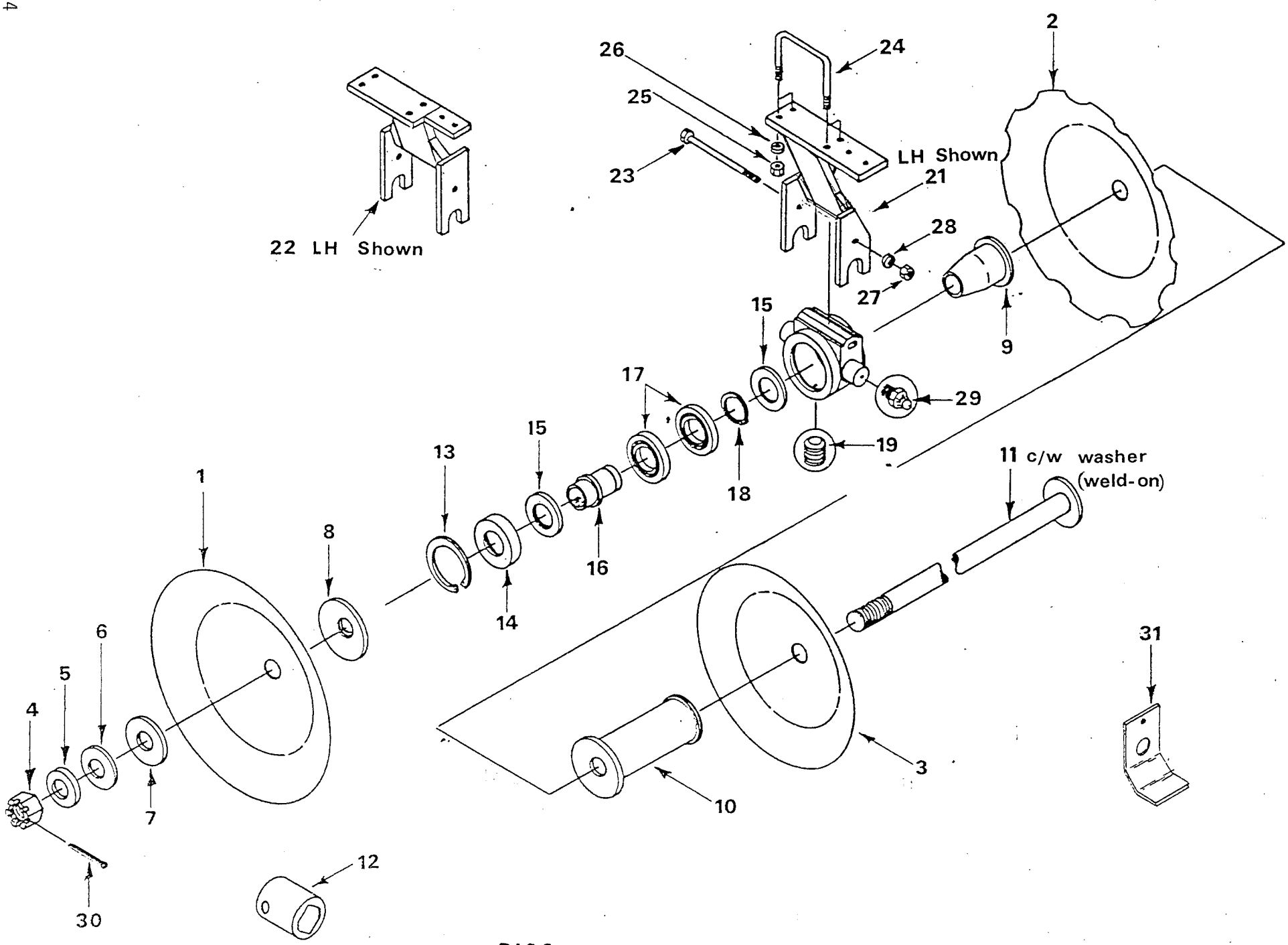

DISC GANG ASSEMBLY
T2-215 BEARING

DISC GANG PARTS LIST
FOR T2-215 BEARINGS

ITEM	PART NUMBER	DESCRIPTION	QTY REQ'D
1		BLADE, Plain & Notched Disc (See DISC GANG PARTS LIST for 211 and 214 Bearings)	*
2		BLADE, Plain & Cone Disc (See DISC GANG PARTS LIST for 211 and 214 Bearings)	*
3		BLADE, Plain Outrigger Disc (See DISC GANG PARTS LIST for 211 and 214 Bearings)	*
4	DG82	NUT, Heavy, Hex Slotted, 2 - 7 UNC	*
5	DG89	WASHER, Shim, 1/4	*
6	DG88	WASHER, Shim, 1/2	*
7	DG78	WASHER, 2 ID x 5 OD x 5/8	*
8	DGA10563	SPOOL, 9" & 10½" spacing, short half, 1-3/8" long (convex side) w/6" washer	*
	DGA10572	SPOOL, 12" spacing - short half, 2-7/8" long (convex side) w/6" washer	*
9	DGA10571	SPOOL, 9" spacing - long half, 2-11/16" long (concave side)	*
	DGA103	SPOOL, 10½" & 12" spacing - long half, 4-3/16" long (concave side)	*
10	DGA100	SPOOL, 9" spacing - Full spool w/6" end washer	*
	DGA101	SPOOL, 10½" spacing - Full spool w/6" end washer	*
	DGA111	SPOOL, 12" spacing - Full spool w/6" end washer	*
11		GANG BOLTS (See DISC GANG PARTS LIST for 211 or 214 Bearings)	*
12	DGA35	WRENCH, Socket	*
13	DG9911	RINGS, Internal Snap (Philip French Sales #D1300-130	*
14	DG9902	CAP, Bearing Housing	*
15	DG9905	SEALS, T2-215 Bearing	*
16	DG9906	SLEEVE	*
17	DG9904	BALL BEARING (#6215)	*
18	DG9910	RING, External Snap (Philip French Sales #D1400-75)	*
19	DG9912	SET SCREW	*
20	DG9900	HOUSING, Heavy Duty Industrial Type, T2-215 Trunion mounted, c/w bearings, seals, sleeve snap rings, & cap	*
	DG9901	HOUSING, T2-215 Bearing	*
21	DGA10566	HANGER, Bearing, Right-hand Trunion Mounted	*
	DGA10567	HANGER, Bearing, Left-hand Trunion Mounted	*
22	DGA10568	HANGER, Bearing, 2" Offset, Right-hand Trunion Mounted	*
	DGA10569	HANGER, Bearing, 2" Offset, Left-hand Trunion Mounted	*
	DGA10586	HANGER, Bearing, 3½" Offset, Right-hand Trunion Mounted	*
	DGA10585	HANGER, Bearing, 3½" Offset, Left-hand Trunion Mounted	*
23		BOLT, Hex, 5/8" x 10" NC	*

* As Required

DISC GANG PARTS LIST FOR T2-215 BEARING CONTINUED

ITEM	PART NUMBER	DESCRIPTION	QTY REQ'D
24	DG5314	U-BOLT, 7/8" - 9 UNC x 6-3/8	*
25		NUT, Hex, 7/8" - 9 UNC	*
26		LOCKWASHER, Helical Spring, 7/8" ID	*
27		NUT, Hex, 5/8 - 11 UNC	*
28		LOCKWASHER, Helical Spring, 5/8" ID	
29	10GN1	FITTING, Grease, Straight, 1/4 - 28 SAE	*
30		COTTERPIN, 3/8 dia. x 3"	*
31	DG10590	SAND GUARD, California Only	*

* As Required

STONE FLEX HANGER (with 211 or 214 4 series bearings)
3600 SERIES DISC

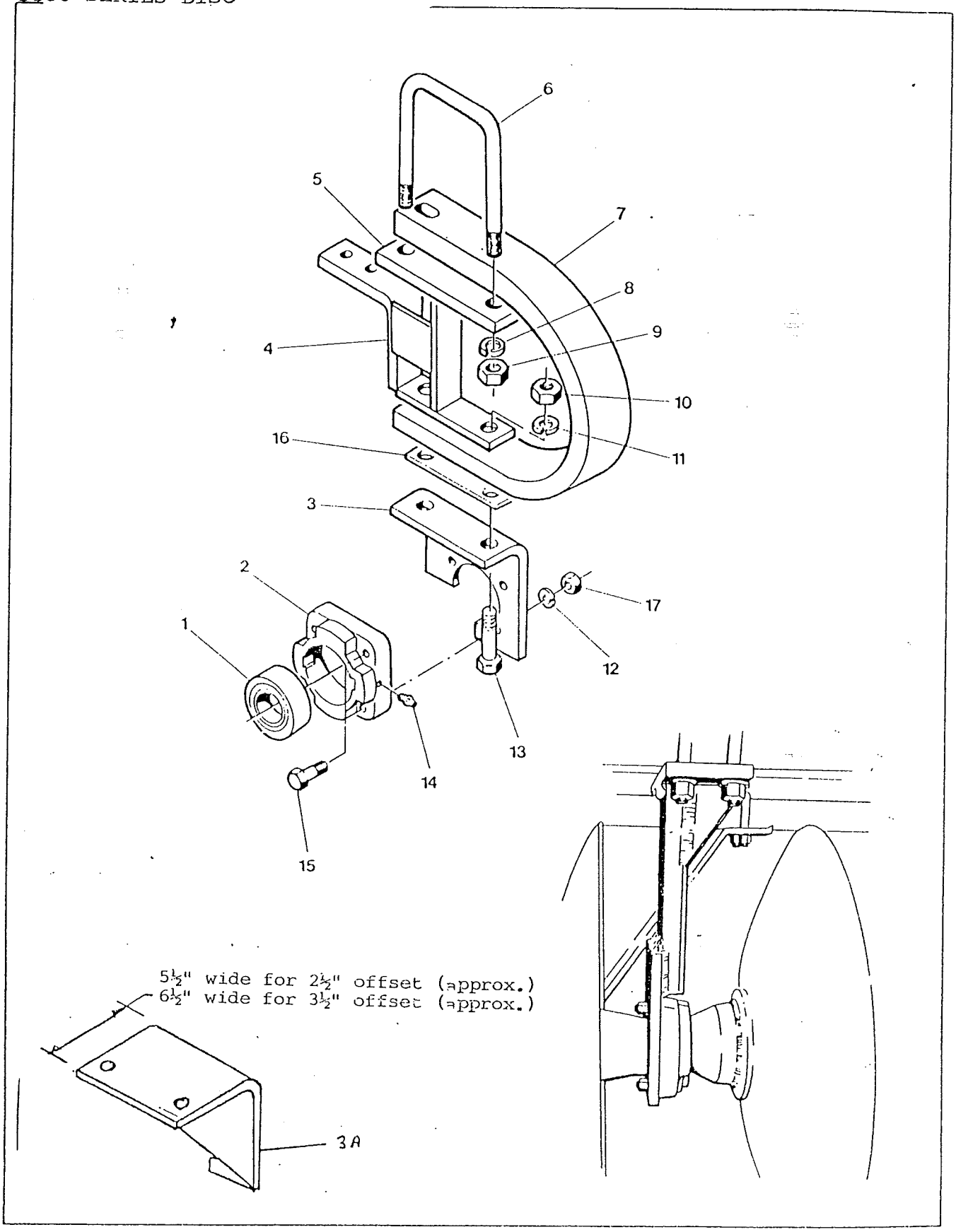

STONE FLEX HANGER FOR 211, 214, OR 410 SERIES BEARINGS

ITEM	PART NUMBER	DESCRIPTION	QTY. REQ'D.
1	DG95	BEARING, Greaseable, 211 Series	
	DG38	BEARING, Greaseable, 214 Series	
	DG108	BEARING, Greaseable, 410 Series	
2	DGB5334	HOUSING, Bearing, 211 Series c/w Bearing & Grease Fitting.	
	DGB5335	HOUSING, Bearing, 214 Series c/w Bearing & Grease Fitting.	
	DG109	HOUSING, Bearing, 410 Series c/w Bearing & Grease Fitting.	
3	DG5342	BRACKET, Left-Hand Mounting, 211 Series- Standard Stone Flex Hanger.	*
	DG5343	BRACKET, Right-Hand Mounting, 211 Series- Standard Stone Flex Hanger.	*
	DG5374	BRACKET, Left-Hand Mounting, 211 Series- 1-1/2" Offset Stone Flex Hanger.	*
	DG5375	BRACKET, Right-Hand Mounting, 211 Series- 1-1/2" Offset Stone Flex Hanger.	*
	DG5344	BRACKET, Left-Hand Mounting, 211 Series- 2" Offset Stone Flex Hanger.	*
	DG5345	BRACKET, Right-Hand Mounting, 211 Series- 2" Offset Stone Flex Hanger.	*
	DGA9787	BRACKET, Left-Hand Mounting, 211 Series- 3-1/2" Offset Stone Flex Hanger For 3609 ONLY.	*
	DGA9788	BRACKET, Right-Hand Mounting, 211 Series- 3-1/2" Offset Stone Flex Hanger For 3609 ONLY.	*
	DGA5324	BRACKET, Mounting 214, 410 Series - Standard Stone Flex Hanger.	*
	DGA5376	BRACKET, Mounting 214, 410 Series - 1-1/2" Offset Stone Flex Hanger.	*
	DGA5341	BRACKET, Mounting 214, 410 Series - 2-1/2" Offset Stone Flex Hanger.	*
	DGA9786	BRACKET, Mounting 214, 410 Series - 3-1/2" Offset Stone Flex Hanger For 3609 ONLY.	*
4	DGA5333	BRACKET, Scraper Bar Support - For Standard Stone Flex Hanger (shown) and 1-1/2" Offset Bracket, for Discs with 26" Cone Blades on 10-1/2" and 12" Spacing on 24" Cone Blades on 9" Spacing.	*
	DGA5336	BRACKET, Scraper Bar Support, Left-Hand Front or Right-Hand Rear Gang - 2-1/2" Offset Hanger ONLY.	*
	DGA5337	BRACKET, Scraper Bar Support, Right-Hand Front or Left-Hand Rear Gang - for 2-1/2" Offset Hanger ONLY.	*

* AS REQUIRED

STONE FLEX HANGER FOR 211, 214, OR 410 SERIES BEARING

ITEM	PART NUMBER	DESCRIPTION	QTY. REQ'D
5	DGA5328	PLATE, Backing	*
6	DG5325	U-BOLT, 7/8 x 7-5/8"	*
7	DG5313	SHANK, Spring, 1-1/4 x 2-1/2	*
8		LOCKWASHER, Helical Spring, 7/8 ID	*
9		NUT, Hex., 7/8 - 9 UNC	*
10		NUT, HEX., 3/4 - 10 UNC	*
11		LOCKWASHER, Helical Spring, 3/4 ID	*
12		LOCKWASHER, Helical Spring, 1/2 ID, 211 Series LOCKWASHER, Helical Spring, 5/8 ID, 214, 410 Series	* *
13		CAPSCREW, Hex., 3/4 - 10 UNC x 3-1/2 CAPSCREW, Hex., 3/4 - 10 UNC x 4-1/2	* *
14	10GN1	FITTING, Grease, Straight, 1/4 - 28 SAE	*
15		CAPSCREW, Hex., 1/2 - 13 UNC x 2-1/4, 211 Series CAPSCREW, Hex., 1/2 - 13 UNC x 2-1/2, 211 Series With Sand Guard.	*
		CAPSCREW, Hex., 5/8 - 11 UNC x 2-1/4, 214, 410 Series CAPSCREW, Hex., 5/8 - 11 UNC x 2-1/2, 214, 410 Series With Sand Guard.	* *
16	DG5332	SHIM - Used with discs with 26" cone blades and discs with 26" standard blades on 9" spacing. NOTE: Discs shipped after July 15, 1988, shim is no longer req'd for Models 10-1/2" and 12" spacing regardless of what ever blade.	
17		NUT, Hex., 1/2 - 13 UNC, 211 Series NUT, Hex., 5/8 - 11 UNC, 214, 410 Series	* *

* AS REQUIRED

** FOR USE ON 3609 WITH 26" DIA.. STANDARD BLADES AND 3610 OR 3612 WITH 26" DIA. CONE BLADES.

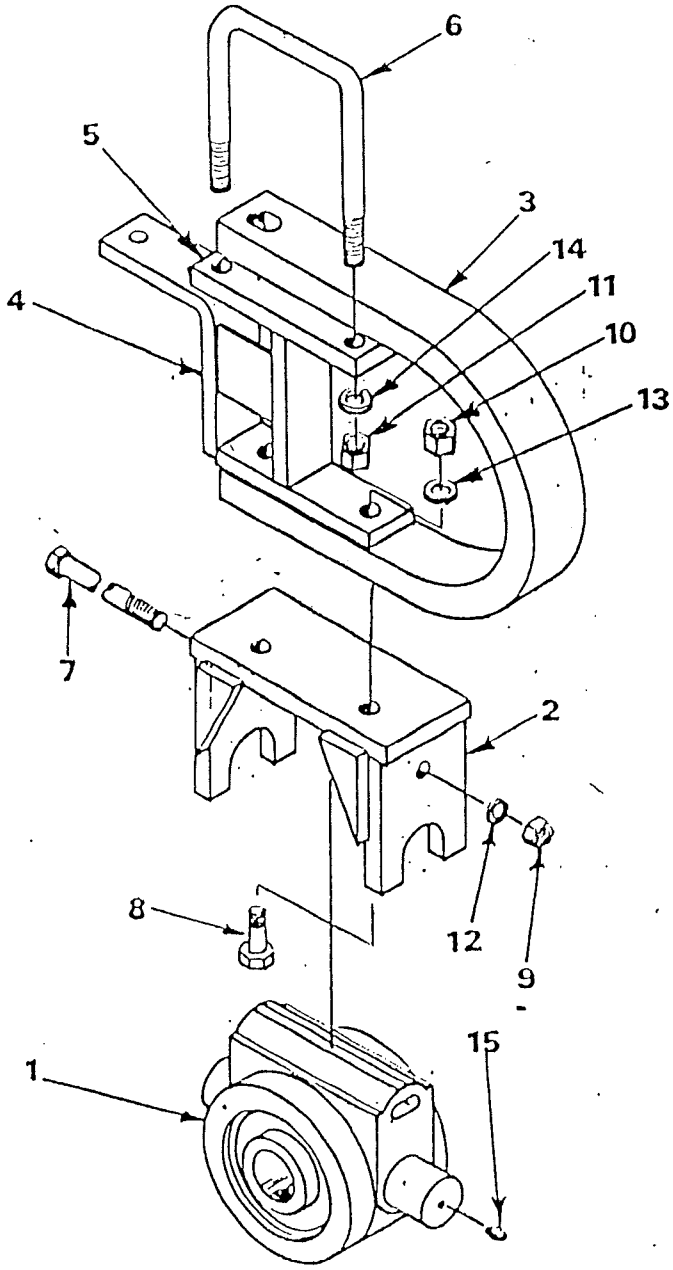

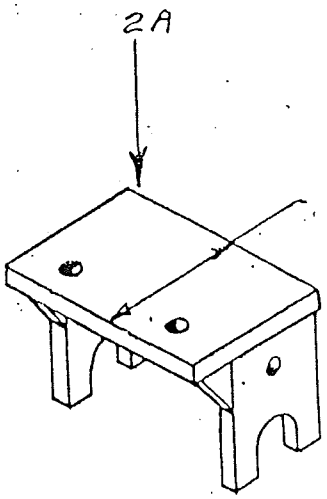

6" wide for 2" offset mounting bracket
7½" wide for 3½" offset mounting bracket

STONE FLEX HANGER
(WITH T2-215 BEARING)

STONE FLEX HANGERS FOR T2-215 BEARINGS

ITEM	PART NUMBER	DESCRIPTION	QTY REQ'D
1	DG9900	HOUSING, Heavy Duty Industrial Type, T2-215 Trunion mounted, c/w bearings, seals, sleeve snap rings, & cap	*
2	DGA10570	BRACKET, Std. mounting, for Trunion mounted bearing	*
2A	DGA10575	BRACKET, 2" Offset mounting, for Trunion mounted bearing	*
	DGA10576	BRACKET, 3½" Offset mounting, for Trunion mounted bearing (3609 only)	*
3	DG5313	SHANK, Spring, 1-1/4 x 2-1/2"	*
4	DG5333	BRACKET, Scraper bar support, for std. & 3½" Offset	*
	DG5336	BRACKET, Scraper bar support, for 2" Offset hanger, used on front L.H. gang or rear R.H. gang	*
	DG5337	BRACKET, Scraper bar support, for 2" Offset hanger, used on front R.H. gang or rear L.H. gang	*
5	DGA5328	PLATE, Backing	*
6	DG5325	U-BOLT, 7/8 x 7-5/8"	*
7		BOLT, Hex, 5/8 x 10" NC	*
8		BOLT, Hex, 3/4 x 3-1/2" NC	*
9		NUT, Hex, 5/8" NC	*
10		NUT, Hex, 3/4" NC	*
11		NUT, Hex, 7/8" NC	*
12		LOCKWASHER, Helical Spring, 5/8"	*
13		LOCKWASHER, Helical Spring, 3/4"	*
14		LOCKWASHER, Helical Spring, 7/8"	*
15		FITTING, Grease, 1/4 x 28	*

* As Required

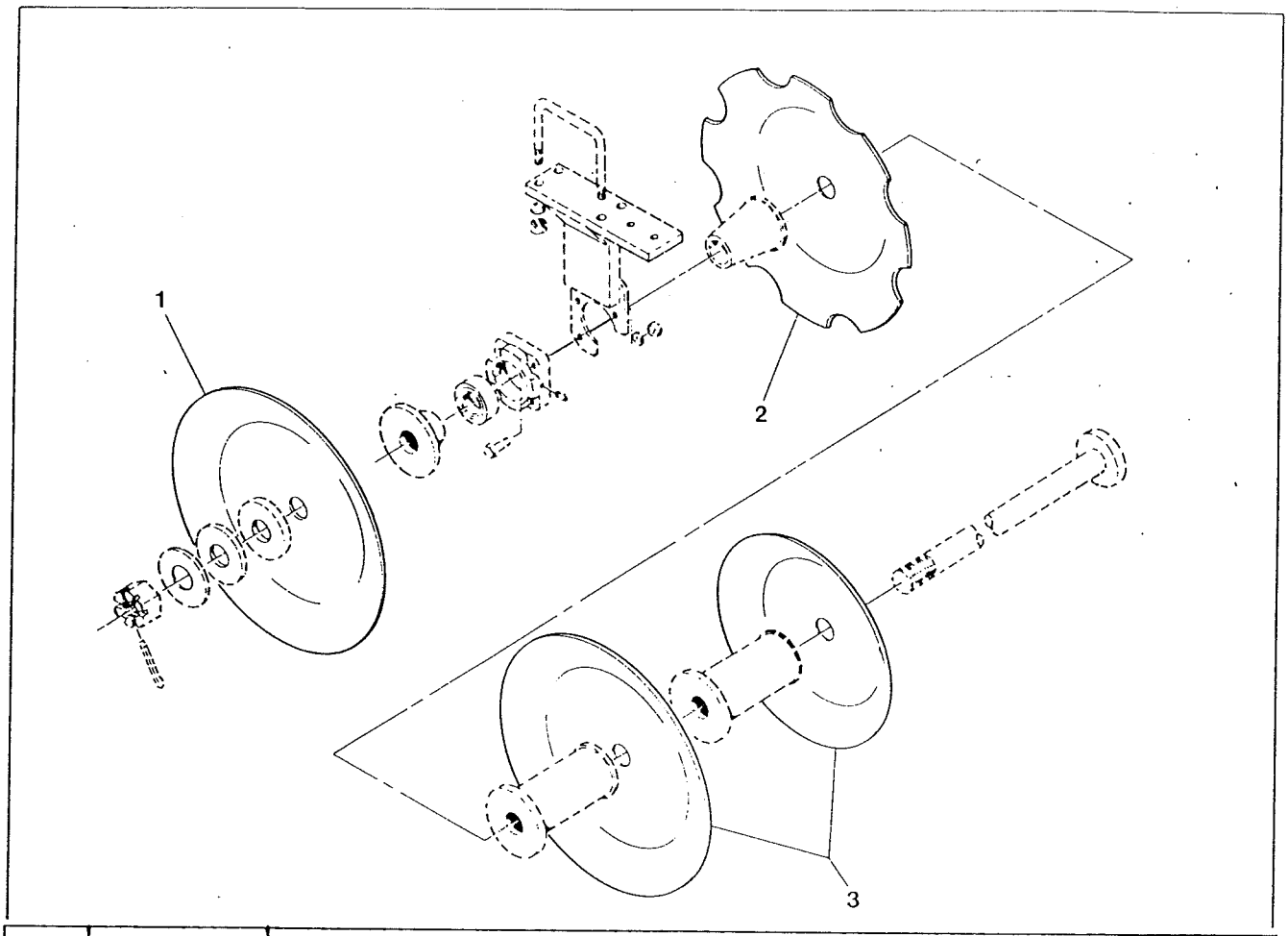

ITEM	ITEM NUMBER	DESCRIPTION	QTY REQ'D
1	DG76	BLADE, Plain Disc, 24" x 7mm (.275)	*
	DG137	BLADE, Plain Disc, 24" x 8mm (5/16")	*
	DG80	BLADE, Plain Disc, 26" x 7mm (.275)	*
	DG74	BLADE, Plain Disc, 26" x 8mm (5/16")	*
	DG139	BLADE, Cone Disc, 24" x 7mm (.275) - solid	*
	DG141	BLADE, Cone Disc, 26" x 7mm (.275) - solid	*
	DG157	BLADE, Cone Disc, 26" x 8mm (5/16") - solid	*
2	DG138	BLADE, Notched Disc, 24" x 8mm (5/16")	*
	DG75	BLADE, Notched Disc, 26" x 8mm (5/16")	*
	DG158	BLADE, Notched Cone Disc, 26" x 8mm (5/16")	*
	DG61	BLADE, Notched Outrigger, 22" x 7mm	*
3	DG84	BLADE, Plain Outrigger, 16" x 4mm (.157)	*
	DG133	BLADE, Plain Outrigger, 18" x 5mm (.197)	*
	DG134	BLADE, Plain Outrigger, 20" x 5mm (.197)	*
	DG64	BLADE, Plain Outrigger, 22" x 6mm (.236)	*

* As Required

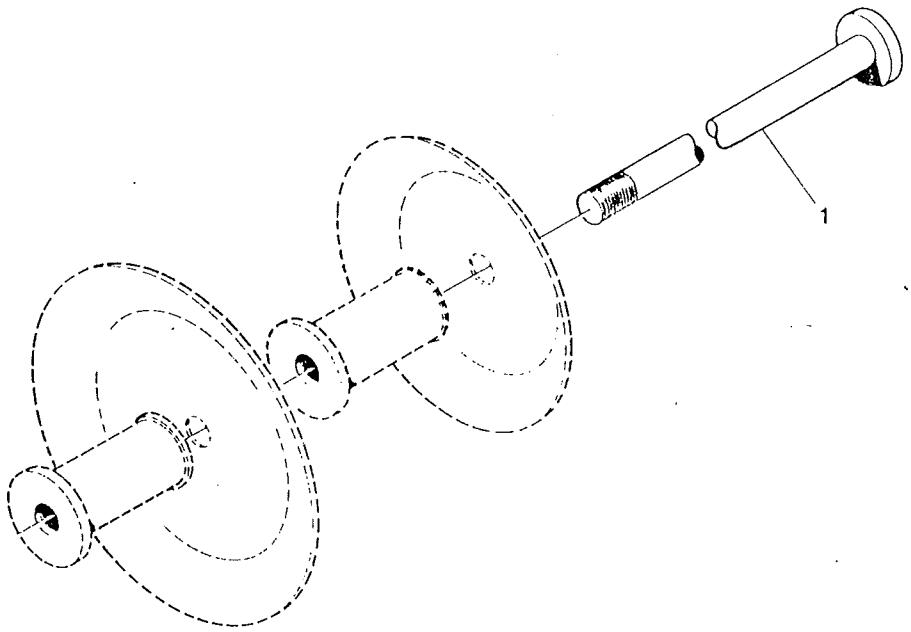

ITEM	PART NUMBER	DESCRIPTION	QTY REQ'D
		FOR 9" SPACING	
1	DGA65	BOLT, Gang, 5 Blade - 42-3/4" long	*
	DGA66	BOLT, Gang, 6 Blade - 52" long	*
	DGA67	BOLT, Gang, 7 Blade - 61-3/4" long	*
	DGA68	BOLT, Gang, 8 Blade - 71" long	*
	DGA70	BOLT, Gang, 10 Blade - 89-1/2" long	*
	DGA72	BOLT, Gang, 12 Blade - 108" long	*
	DGA73	BOLT, Gang, 13 Blade - 117-1/2" long	*
	DGA69	BOLT, GANG, 9 BLADE - 80" LONG	*
	DGA74	BOLT, GANG, 14 BLADE - 126½" LONG	*
		FOR 10½" SPACING	
	DGA85	BOLT, Gang, 4 Blade - 38" long	*
	DGA75	BOLT, Gang, 5 Blade - 48-1/2" long	*
	DGA76	BOLT, Gang, 6 Blade - 60" long	*
	DGA78	BOLT, Gang, 8 Blade - 81-1/4" long	*
	DGA80	BOLT, Gang, 10 Blade - 103" long	*
	DGA82	BOLT, Gang, 12 Blade - 124-3/4" long	*
	DGA84	BOLT, Gang, 14 Blade - 146-1/2" long	*
		FOR 12" SPACING	
	DGA124	BOLT, Gang, 3 Blade - 26" long	*
	DGA114	BOLT, Gang, 4 Blade - 43-1/4" long	*
	DGA115	BOLT, Gang, 6 Blade - 67-3/4" long	*
	DGA69	BOLT, Gang, 7 Blade - 80" long	*
	DGA79	BOLT, Gang, 8 Blade - 92" long	*
	DGA119	BOLT, Gang, 10 Blade - 117" long	*
	DGA120	BOLT, Gang, 11 Blade - 129" long	*

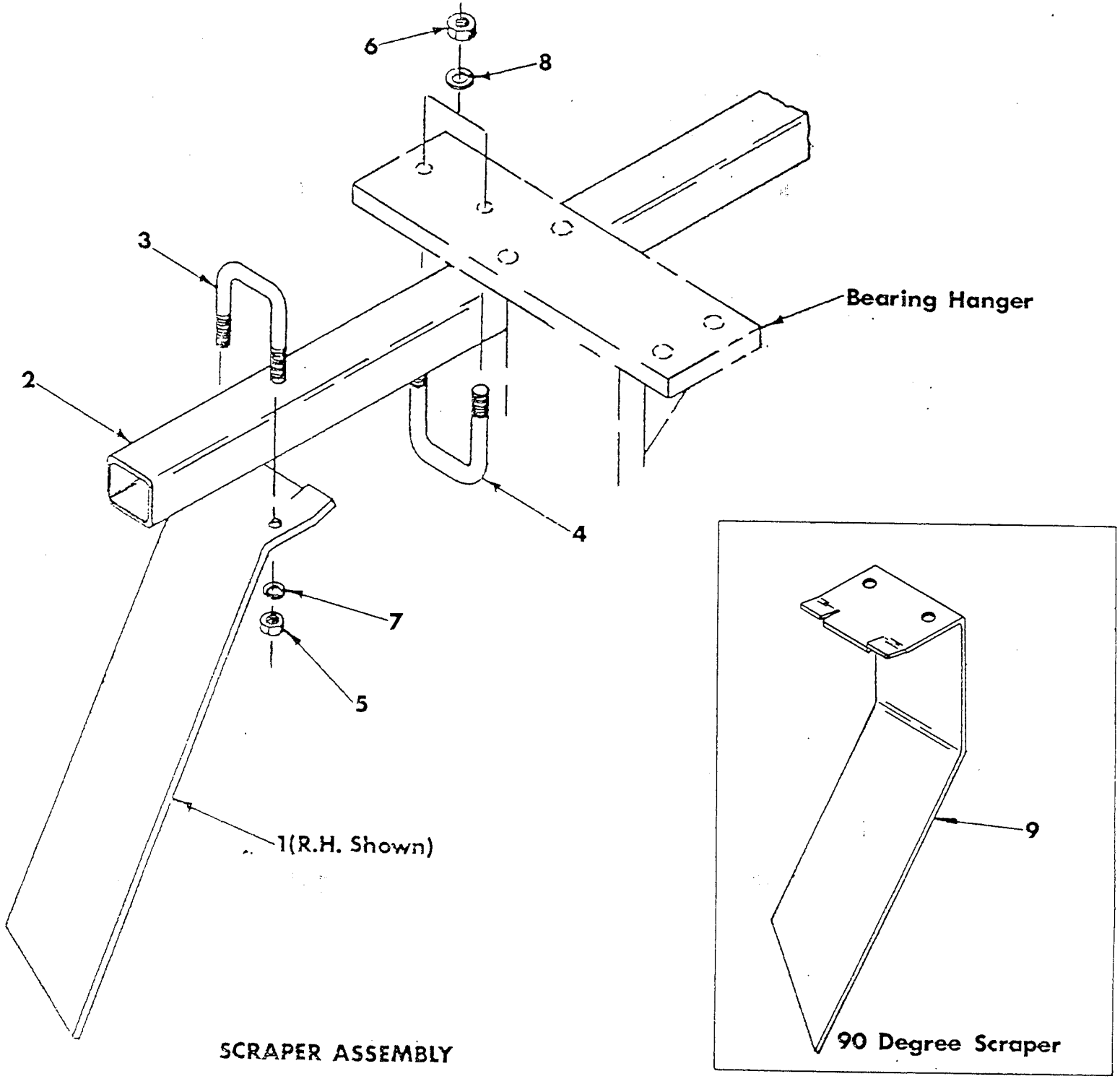

SCRAPER ASSEMBLY

MODEL 3600 DISC
SCRAPER ASSEMBLY PARTS LIST

Ref. No.	Part. No.	Description	Qty. Req'd
1	DG5300	L.H. scraper (standard)	*
	DG5301	R.H. scraper (standard)	*
	DG5304	L.H. scraper (for cone blades only)	*
	DG5305	R.H. scraper (for cone blades only)	*
		Scraper Bars for 9" Spacing	
2	DS45	5 Blade scraper bar - 45½"	*
	DS52	6 Blade scraper bar - 52" (for gang with one 90 degree scraper)	*
	DS64	7 Blade scraper bar- 64"	*
	DS60	7 Blade scraper bar - 60" (for gang with one 90 degree scraper)	*
	DS73	8 Blade scraper bar - 73½"	*
	DS82	9 Blade scraper bar - 82"	*
	DS78	9 Blade scraper bar - 78½" (for gang with one 90 degree scraper)	*
	DS92	10 Blade scraper bar - 92"	*
	DS88	10 Blade scraper bar - 88" (for gang with one 90 degree scraper)	*
	DS110	12 Blade scraper bar - 110"	*
	DS107	12 Blade scraper bar - 107" (for gang with one 90 degree scraper)	*
	DS115	13 Blade scraper bar - 115½" (for gang with one 90 degree scraper)	*
	DS129	14 Blade scraper bar - 129½"	*
		Scraper Bar for 10½" Spacing	
	DS41	4 Blade scraper bar - 41"	*
	DS36	4 Blade scraper bar - 36½" (for gang with one 90 degree scraper)	*
	DS52	5 Blade scraper bar - 52"	*
	DS58	6 Blade scraper bar - 58" (for gang with One 90 degree scraper)	*
	DS82	8 Blade scraper bar - 82"	*
	DS105	10 Blade scraper bar - 105"	*
	DS127	12 Blade scraper bar - 127½"	*
	DS149	14 Blade scraper bar - 149"	*
		Scraper Bar for 12" Spacing	
	DS32	3 Blade scraper bar - 32½"	*
	DS45	4 Blade scraper bar - 45½"	*
	DS66	6 Blade scraper bar - 66" (for gang with one 90 degree scraper)	*
	DS82	7 Blade scraper bar - 82"	*
	DS94	8 Blade scraper bar - 94½"	*
	DS120	10 Blade scraper bar - 120"	*
	DS132	11 Blade scraper bar - 132"	*
3	DG5308	½" x 2" U-bolt	*
4	DG5309	5/8" x 2" U-bolt	*

MODEL 3600 DISC
SCRAPER ASSEMBLY PARTS LIST

Ref. No.	Part No.	Description	Qty. Req'd
5		½" N.C. hex. nut	*
6		5/8" N.C. hex. nut	*
7		½" lockwasher	*
8		5/8" lockwasher	*
9	DG9697	L.H. scraper - 90 degree	*
	DG9698	R.H. scraper - 90 degree	*
	DG9783	L.H. scraper - 90 degree (for cone blades only)	*
	DG9784	R.H. scraper - 90 degree (for cone blades only)	*

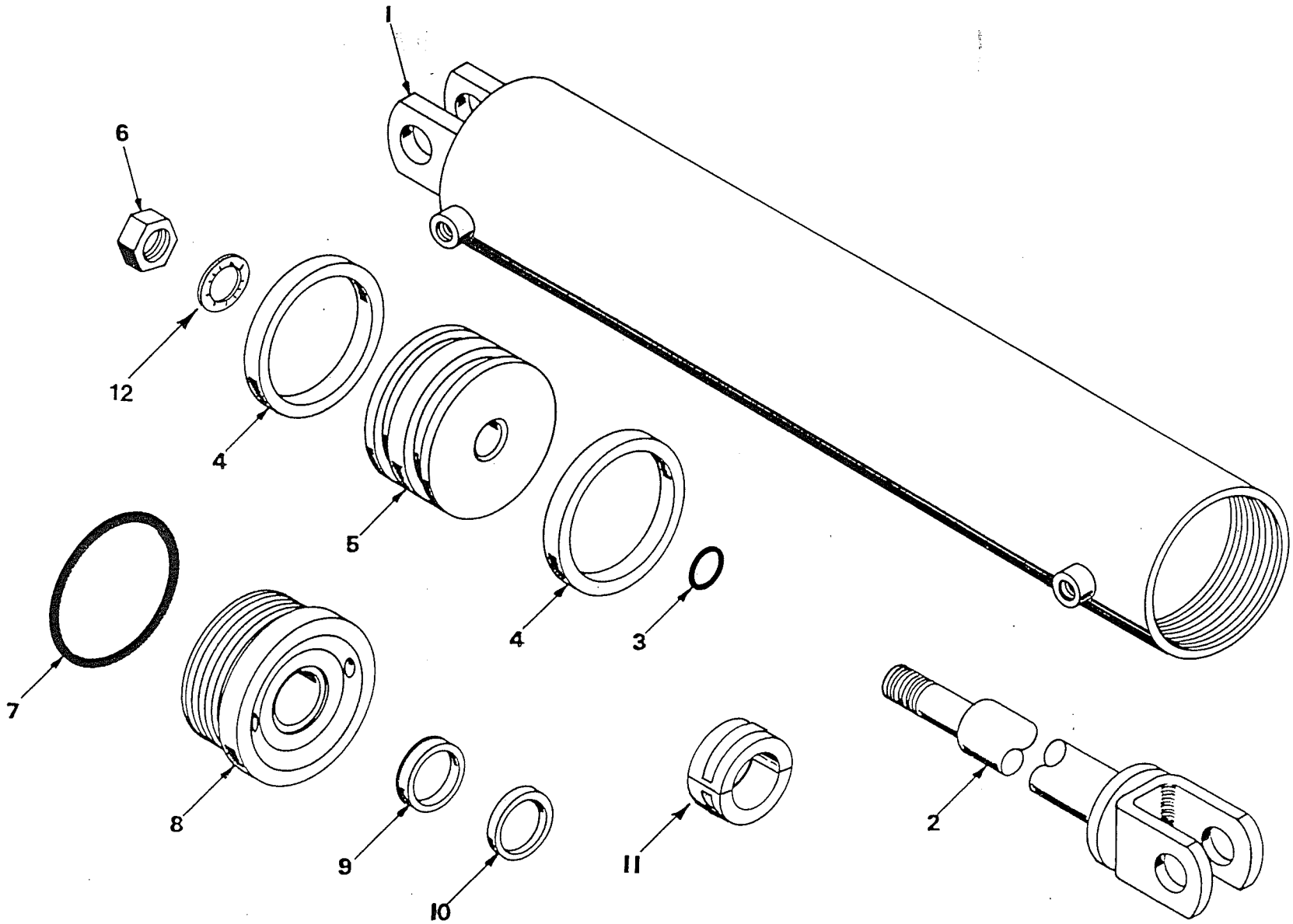

ROCKSHAFT CYLINDER
N4 TYPE
For Discs with serial no. 21711 & up

ROCKSHAFT CYLINDER PARTS LIST

N4 - NUT TYPE

FOR DISCS WITH SERIAL #21711 AND UP

REF. NO.	PART NO.	DESCRIPTION	QTY. REQ'D.
1	50TU9	Tube Assembly - 5" x 24"	1
2	10SH50	Shaft - 1-3/4" x 24"	1
3	100R18	1/8" x 1-1/4" O.D. O-Ring	1
4	50CU1	U-Cup	2
5	50PB1	Piston	1
6	10NU2	1" - 14 UNS Hex. Nut	1
7	100R14	1/4" x 5" O.D. O-Ring	1
8	50HP1	Head Plate - 5" O.D. x 1-3/4" I.D.	1
9	10RS3	Rod Seal - 1-3/4" I.D.	1
10	10WS3	Wiper Seal - 1-3/4" I.D.	1
11	CR50711 CR50712 CR50713 CR50714 CR50717	Depth control stop ring - 1" long Depth control stop ring - 1-1/2" long Depth control stop ring - 1-3/4" long Depth control stop ring - 2" long Depth control stop ring - 4-1/4" long	
12	10SW2	Internal Star Washer - 1" I.D.	1

ROCKSHAFT CYLINDER 3600 SERIES

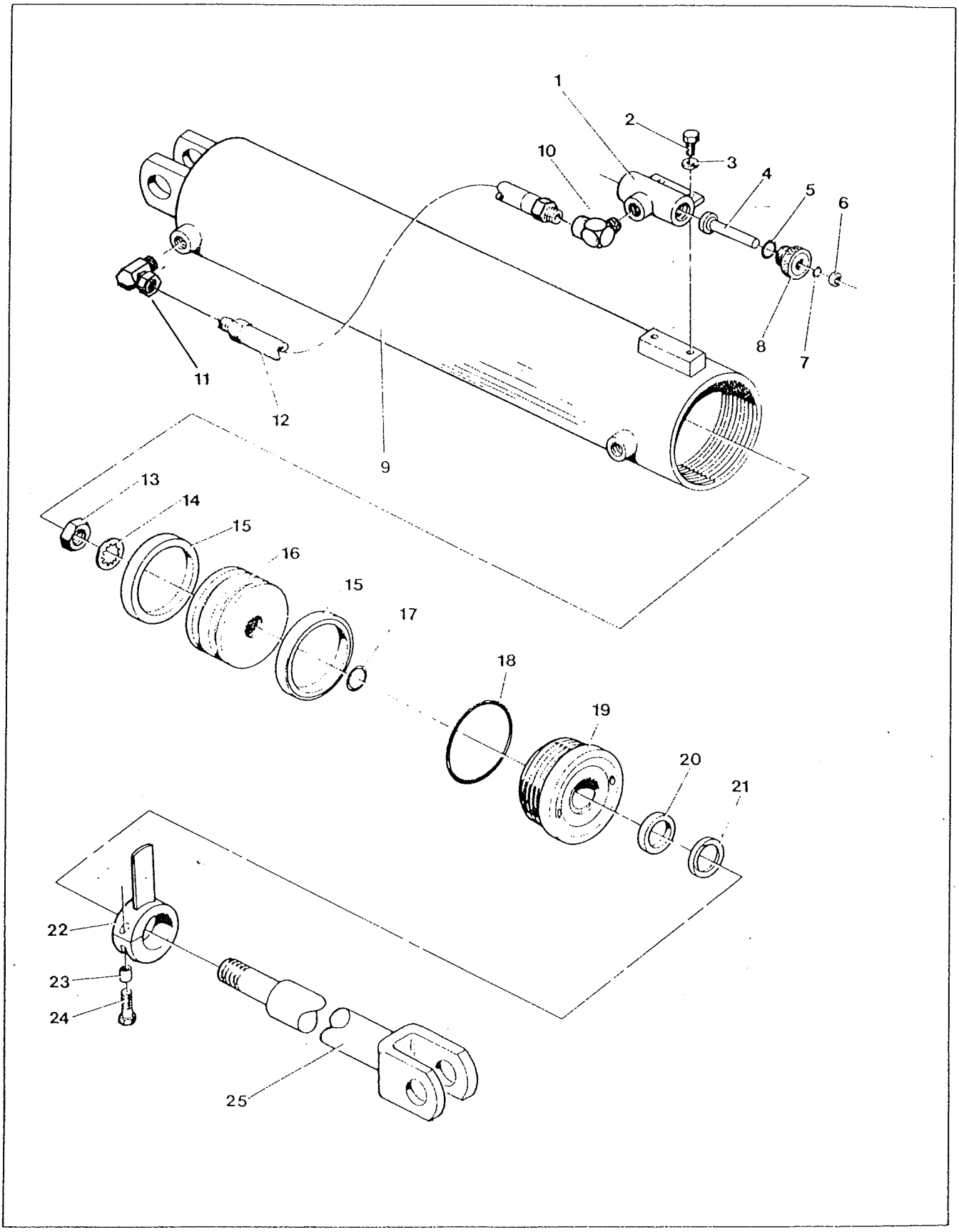

ROCKSHAFT CYLINDER - HYDRAULIC DEPTH STOP TYPE

ITEM	PART NUMBER	DESCRIPTION	ALL MODELS
	213	CYLINDER, Rockshaft, 5" dia. x 24", Complete With Depth Control Stop	1
1	DCA7	DEPTH CONTROL ASSEMBLY (Includes items 4 to 8)	1
2		CAPSCREW, Hex., Gr. 5, 1/2 - 13 UNC x 7/8	2
3		LOCKWASHER, Helical Spring, 1/2 ID	2
4	DC28	PISTON	1
5	DC29	O-RING, 7/8 ID x 1-1/16	1
6	DC32	SEAL, Wiper, 3/8 ID	1
7	DC20	O-RING, 3/8 ID x 1/16	1
8	DC30	PLUG	1
9	5OTU2	TUBE ASSEMBLY, 5" dia. x 24"	1
10	DL9777	ELBOW, Street, 90 Degree, 1/2 NPT (Steel) **	2
11	DL9775	1/2" x 90 Degree Swivel Elbow (Male-Female)*	1
12	H26-1	HOSE ASSEMBLY, 1/2 - 100 RIA x 26"	1
13		NUT, Hex., Gr. 8, 1 - 14 UNS	1
14		LOCKWASHER, Internal Tooth, 1 ID	1
15	5OCUI	U-CUP, 4-1/2 ID x 5 OD x 9/16	2
16	5OPBI	PISTON, 5 OD x 2-1/2	1
17	1OOR13	O-RING, 1-1/4 OD x 1/3	1
18	1OOR14	O-RING, 5 OD x 1/4	1
19	5OHPI	HEAD, Plate, 1-3/4 ID x 5 OD	1
20	1ORS3	SEAL, Rod, 1-3/4 ID x 2-1/ OD x 3/8	1
21	1OWS3	SEAL, Wiper, 1-3/4 ID x 2-1/8 OD x 3/16	1
22	DCA6	STOP, Depth Control (Includes Items 23 & 24)	1
23	DC33	SPACER, 3/8 ID x 11/16	1
24		CAPSCREW, Hex., Gr. 5, 3/8 - 16 UNC x 1-3/4	1
25	1OSH26	SHAFT, 1-3/4 dia. x 24"	1
26	DCB4	SEAL KIT, Depth Control (Includes Items 5 to 7)	AR
27	5017N4	SEAL KIT, Cylinder (Includes Items 15, 17, 18, 20, 21)	AR

** Fluidic Part No. 8003-08-08

* Fluidic Part No. 8024-08-08

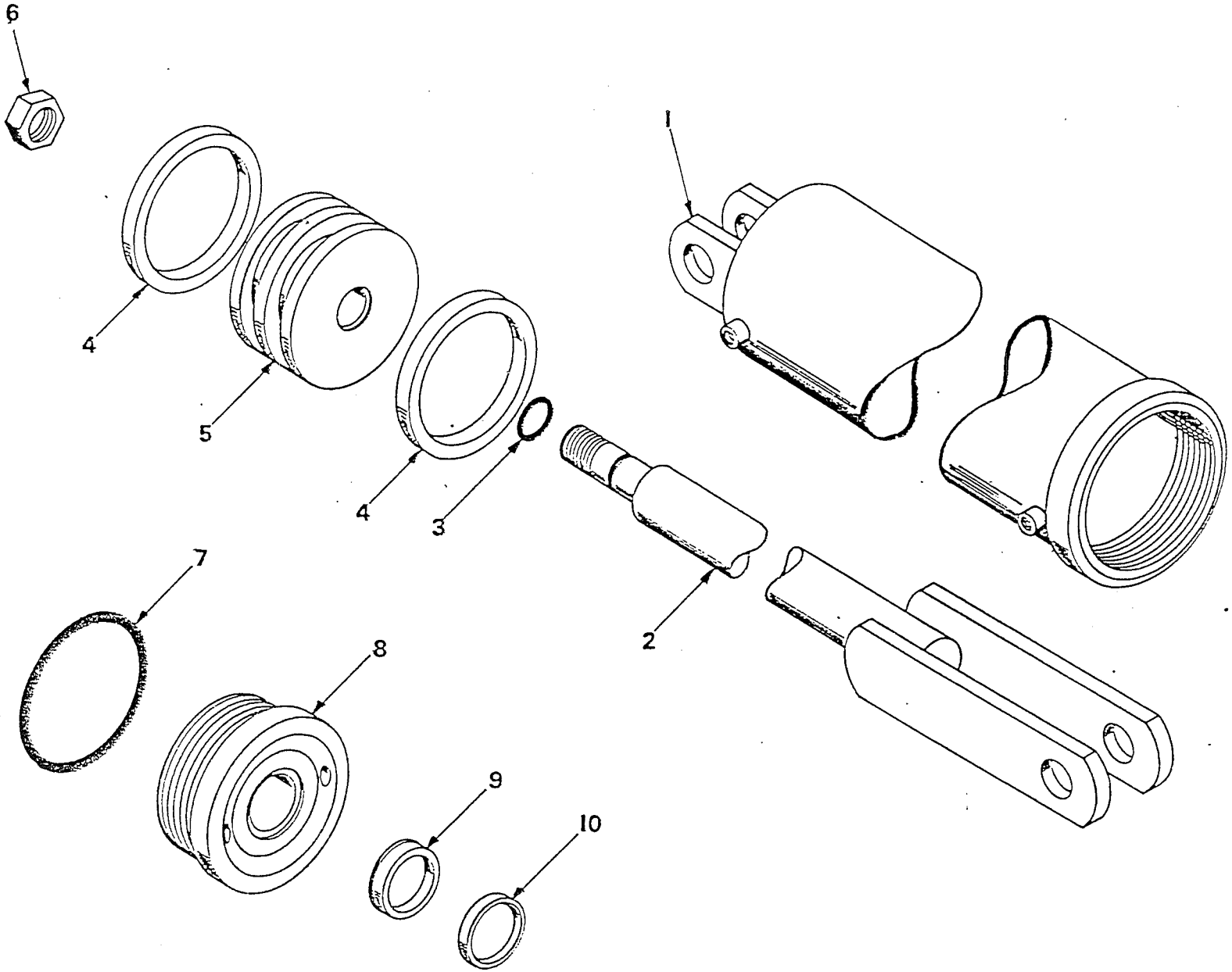

WING LIFT CYLINDER

WING LIFT CYLINDER - WITHOUT STEEL OIL LINE

(5" x 36" CYLINDER)

REF. NO.	PART NO.	DESCRIPTION	QTY. REQ'D.
1	50TU8	TUBE ASSEMBLY - 5" x 36" (Less Steel Oil Line) For Cylinder #242.	1
2	10SH36	SHAFT - 1-3/4" x 36", For 1-1/4" Nut	1
3	100R19	1-1/8" ID x 1-1/4" OD O-Ring, For 1-1/4" Nut	1
4	50CU1	5" U-Cup	2
5	50PB2	PISTON - For 1-1/4" Nut	1
6	10NU3	1-1/4" x 12 UNS Hex. Nut	1
7	100R14	4-1/2" ID x 5" OD O-Ring	1
8	50HP1	5" Head Plate	1
9	10RS3	Rod Seal	1
10	10WS3	Wiper Seal	1

* AS REQUIRED

WING LIFT CYLINDER - W/METAL OIL LINE (5" x 36" CYLINDER)

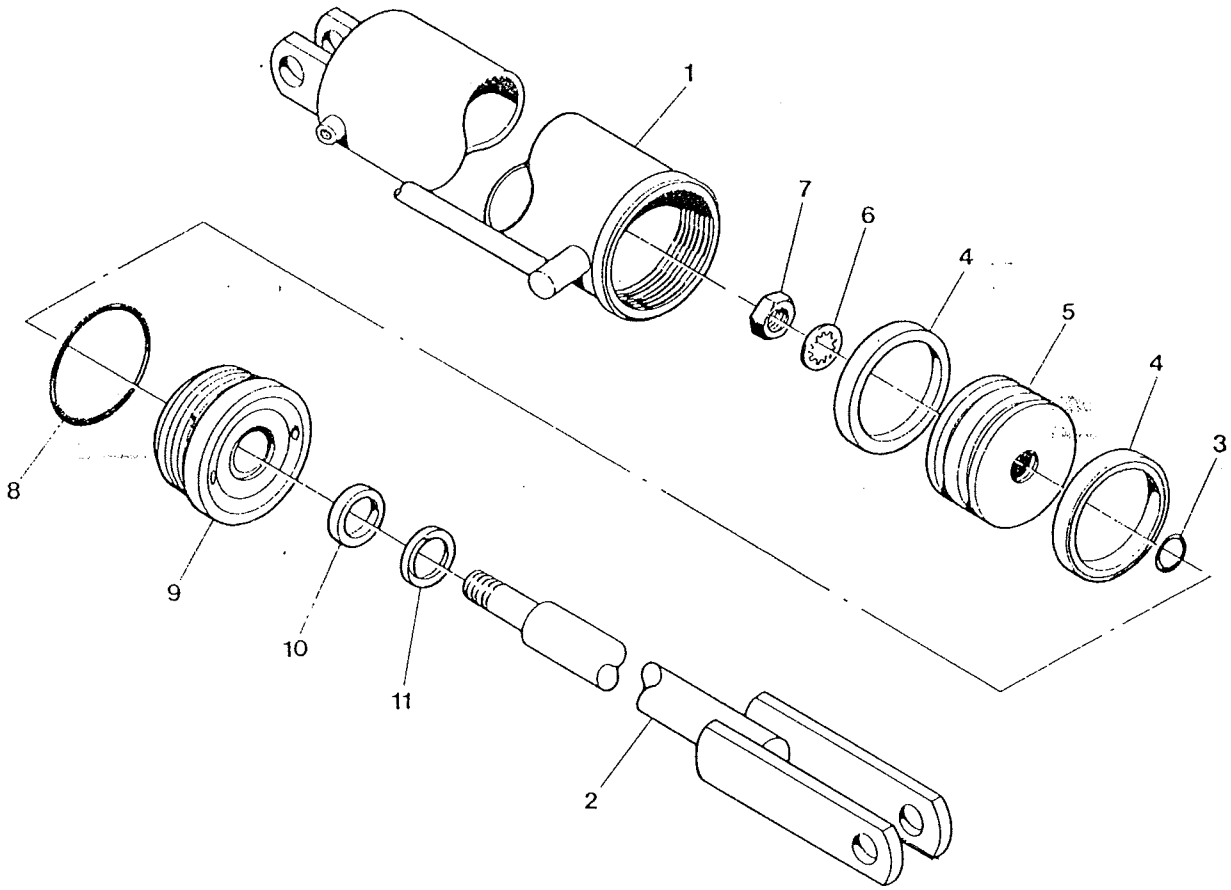

ITEM	PART NUMBER	DESCRIPTION	ALL MODELS
	215	WING LIFT CYLINDER ASSEMBLY	4
1	50TU5	TUBE ASSEMBLY, 5" DIA. x 36"	1
2	10SH28	SHAFT, 1-3/4 x 36	1
3	100R13	O-RING, 1 ID x 1-1/4 OD	1
4	50CU1	U-CUP, 5 x 4-1/2 x 9/16	2
5	50PB1	PISTON, 5 OD x 2-1/2	1
6	10SW2	LOCKWASHER, Internal Tooth, 1 ID	1
7	10NU2	NUT, Hex., 1 - 14 UNS	1
8	100R14	O-RING, 4-1/2 ID x 5 OD	1
9	50HP1	HEAD PLATE, 1-3/4 ID x 5 OD	1
10	10RS3	ROD SEAL, 1-3/4 x 2-1/8 x 3/8	1
11	10WS3	WIPER SEAL, 1-3/4 x 2-1/8 x 3/16	1
	5017N4	KIT, Repair (Includes 3, 4, 8, 10, 11)	1

CYLINDER SEAL KITS
MODEL 3600/3650 DISC

KIT NO.	DESCRIPTION	APPLICATION
5017N4	2 50CU1 5/8" Wide U-Cup 1 100R13 1/8" x 1-1/4" O.D. O-Ring 1 100R17 1/4" x 5" O.D. O-Ring 1 10RS3 Rod Seal 1-3/4" x 2-1/8" x 3/8" 1 10WS3 Wiper Seal 1-3/4" x 2-1/8" x 3/16"	5" x 24" Rockshaft and Wing Lift Cylinder
DCB4	1 DC29 1-1/16" O.D. x 7/8" I.D. O-Ring 1 DC20 1/16" x 1/2" O.D. O-Ring 1 DC32 Wiper Seal 3/8" x 5/8" x 3/16"	For Rockshaft Cylinders with Hydraulic Depth Control Only

MANUFACTURER'S WARRANTY

EZEE-ON warrants each new product of EZEE-ON manufacture, when properly assembled, adjusted and operated, to be free from defects in materials, and/or workmanship under normal use for which it was intended, for a period of one (1) year from date of purchase. EZEE-ON's obligation under this warranty is limited to repairing or replacing, F.O.B. the EZEE-ON factory, any part or parts which are reported in writing, giving all details by the Dealer, within thirty (30) days from date of failure thereof, and which by EZEE-ON's inspection shall disclose to have been defective. This does not include installation, oil, freight, or any other charges. In no event will EZEE-ON assume any responsibility for consequential damages to tractors or any other equipment. EZEE-ON shall not be liable for any damages of any nature or source resulting from defects in material or workmanship and/or loss of use of said equipment. EZEE-ON makes no warranty on allied parts which are not manufactured by EZEE-ON. The warrany set forth herein shall be void if any part or parts not manufactured or supplied by EZEE-ON are used in the assembly or repair of the implement manufactured by EZEE-ON. This warranty is void if equipment is modified, altered, cut up, rewelded, or used for purposes not intended for. This warranty is void if implement is used for purposes other than agricultural.

NO WARRANTY shall be allowed on disc blades and bearings which are not manufactured by EZEE-ON, except such as is provided by the manufacturer of such equipment. Disc blade warranty is outlined by manufacturer's brochures showing causes of failure.

NO WARRANTY shall be allowed if wrong type or insufficient gauge blades are purchased with the disc. It is the responsibility of the purchaser to purchase heavy enough blades and bearings to withstand the conditions which he will be working under.

EZEE-ON will assume no responsibility for warranty of tires and tubes. The responsibility for adjustment or replacement lies with the manufacturers of such equipment.

REMEMBER!!!

ONLY YOU CAN PREVENT ACCIDENTS.

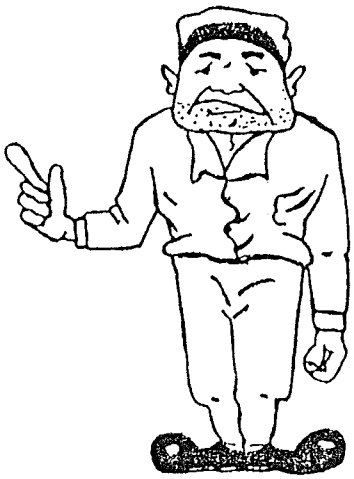

PRINTED IN CANADA.